Great Gear: TOP NEW TOOLS

GUILD ◆ EDITION

ADD MORE COLOR! Smart Paint Tips

Woodsmith®

Woodsmith.com

Vol. 47 / No. 281

SERVING TRAY & Table

- Clever Router Details
- Solid Table Joinery
- Easy-to-Build Design

There's More Inside:

- Learn a Table Saw Technique for Strong Miters
- Discover a Fun Way to Get Started in Carving
- Build a Roll-Around Lumber Cart

WHY BUY FROM GRIZZLY?

- We buy direct from factories and sell direct to you
- High-quality, award-winning machines
- Over five million parts in stock for instant after-service
- 98% of in-stock orders ship same-day
- Two overseas quality control offices with Grizzly engineers
- U.S.-based product experts offer friendly support
- Detailed owners' manuals set the industry standard
- Family-owned and operated since inception

OVER 1,000 MACHINE CHOICES

grizzly.com®

800-523-4777 #GRIZZLYTOOLS

affirm Monthly Payments | clicklease Business to Business Equipment Financing

FINANCING AVAILABLE

Please visit grizzly.com for up-to-date pricing.

Due to rapidly changing market conditions, our advertised prices may be changed at any time without prior notice.

⚠ WARNING! †[1] : Cancer & Reproductive Harm

Some products we sell can expose you to chemicals known to the State of California to cause cancer and/or birth defects or other reproductive harm. For more information go to www.P65Warnings.ca.gov.

23705

Purveyors of Fine Machinery® Since 1983

Grizzly Industrial®

Buy Direct & Save

FREE 640-PAGE CATALOG!

The Industry's Leading Sourcebook for Metalworking & Woodworking Machinery

Request yours at www.grizzly.com/forms/catalog-request

10" 3 HP Table Saw

Elevate your shop's capabilities

- 48" x 27" Precision-ground cast-iron table
- Router table extension
- Shop Fox® Classic Fence
- Universal T-track router clamping system
- Extra-large handwheels
- Footprint: 20½" x 20½"
- Shipping weight: ≈ 550 lbs.

MADE IN AN ISO 9001 FACTORY

G1023RLW // ONLY $2515

$349 FREIGHT

17" 2 HP Bandsaw

Cut complex curves effortlessly

- 16⅛" Cutting capacity
- 12⅛" Resaw capacity
- Two-position resaw fence
- Geared micro-adjustable table tilt
- Resaw drift bar allows you to steer your workpiece
- Footprint: 27" x 18"
- Shipping weight: ≈ 364 lbs.

MADE IN AN ISO 9001 FACTORY

G0513Z // ONLY $1359

$255 FREIGHT

6" x 46" 1½ HP Jointer

Achieve truly flat stock

- 32-indexable-carbide insert spiral cutterhead
- Lever-adjusted infeed table with depth gauge
- Handwheel-adjusted outfeed table
- Rack-and-pinion adjusting fence
- Built-in mobile base
- Footprint: 18" x 13½"
- Shipping weight: ≈ 266 lbs.

G0452Z // ONLY $1335

$199 FREIGHT

15" 2 HP Benchtop Planer

Transform lumber into finished stock

- 32-Indexable-carbide insert spiral cutterhead
- 12 and 22 FPM feed speeds
- Thickness DRO
- 3/16" to 6" Material capacities
- Board return roller
- Footprint: 23½" x 19"
- Shipping weight: ≈ 157 lbs.

MADE IN AN ISO 9001 FACTORY

G0999 // ONLY $1359

$199 FREIGHT

20" 5 HP Variable-Speed Planer

High-end planing performance

- 92-Indexable-carbide insert helical cutterhead
- Digital table height scale
- 10–28 FPM variable-feed control
- Precision-ground cast-iron extension wings
- Pedestal-mounted controls
- Footprint: 23½" x 29½"
- Shipping weight: ≈ 820 lbs.

MADE IN AN ISO 9001 FACTORY

SB1109 // ONLY $4719

$399 FREIGHT

14" ¾ HP Floor Drill Press

Increase efficiency with unique features

- 340–2860 RPM 12-speed spindle
- LED light increases visibility for drilling precision
- Push-button spindle depth stop for repeatable drilling
- Rack-and-pinion vertical table movement
- Cast-iron table with four T-slots
- Footprint: 18" x 10½"
- Shipping weight: ≈ 133 lbs.

MADE IN AN ISO 9001 FACTORY

T33902 // ONLY $655

$199 FREIGHT

½ HP Benchtop Hollow-Chisel Mortiser

Simplify intricate joinery

- ¼", ⅜", and ½" Four-sided chisels
- Multi-position handle
- Adjustable depth stop
- Coarse and fine fence adjustment
- Extra chuck and arbor for drill press operations
- Footprint: 10" x 8"
- Shipping weight: ≈ 67 lbs.

MADE IN AN ISO 9001 FACTORY

T33127 // ONLY $369

$69.95 SHIPPING

16" x 24" Variable-Speed Wood Lathe

Large turning capacities

- VFD for electronic variable-speed control
- Digital spindle speed readout
- Adaptable headstock positioning
- Lever-action cam locks
- Belt drive with two speed ranges
- Footprint: 42½" x 16"
- Shipping weight: ≈ 388 lbs.

MADE IN AN ISO 9001 FACTORY

G0838 // ONLY $2139

$255 FREIGHT

6" x 48" Belt / 12" Disc Combination Sander

Master intricate sanding tasks

- Vertical, horizontal, or angled sanding
- Precision-ground cast-iron tables tilt 0–45°
- 0, 45°, and 90° Machined detents
- Heavy-duty miter gauge
- Steel cabinet base minimizes vibration
- Footprint: 19" x 21"
- Shipping weight: ≈ 327 lbs.

MADE IN AN ISO 9001 FACTORY

SB1093 // ONLY $1655

$255 FREIGHT

Woodsmith®

AN ACTIVE INTEREST MEDIA PUBLICATION

EXECUTIVE EDITOR Phil Huber
ASSISTANT EDITOR Rob Petrie

EXECUTIVE ART DIRECTOR Todd Lambirth
SENIOR GRAPHIC DESIGNERS Becky Kralicek, Danielle Lowery-Ruscher
CONTRIBUTING ILLUSTRATOR Harlan Clark

CREATIVE DIRECTOR Chris Fitch
PROJECT DESIGN EDITOR Dillon Baker
PROJECT DESIGNER/BUILDER John Doyle
SHOP MANAGER Marc Hopkins
CONTRIBUTING PHOTOGRAPHER Chris Hennessey

ADVERTISING DIRECTOR Jack Christiansen
847-724-5633
jchristiansen@aimmedia.com
AD PRODUCTION COORDINATOR Julie Dillon
GRAPHIC DESIGNER Gaby Crespo

HOME GROUP
ACTIVE INTEREST MEDIA

SENIOR VICE PRESIDENT, CONTENT Rob Yagid
EXECUTIVE DIGITAL EDITOR Ben Strano
DIGITAL PRODUCTION SPECIALIST Zara Hanif

ACTIVE INTEREST MEDIA

CHAIRMAN & CEO Andrew W. Clurman
CHAIRMAN EMERITUS Efrem Zimbalist III
CHIEF OPERATING OFFICER Brian Van Heuverswyn
CHIEF FINANCIAL OFFICER Adam Smith
SENIOR VICE PRESIDENT, MARKETING Erica Moynihan
VICE PRESIDENT, MARKETING Amanda Phillips
VICE PRESIDENT, CIRCULATION Paige Nordmeyer
SENIOR VICE PRESIDENT, SALES Mike Burns
VICE PRESIDENT, SALES OPERATIONS Christine Nilsen
VICE PRESIDENT, DIGITAL PRODUCT DEVELOPMENT Ashley MacDonald
VICE PRESIDENT, STRATEGY & RESEARCH Kristina Swindell
DIRECTOR, HUMAN RESOURCES Scott Roeder
DIRECTOR, PRODUCTION Phil Graham
DIRECTOR, RETAIL SALES Susan A. Rose
DIRECTOR, INFORMATION TECHNOLOGY Andrew Shattuck

Woodsmith® (USPS 465-410) (ISSN 0164-4114) is published bimonthly by the Home Group of Active Interest Media Holdco, Inc. The known office of publication is located at 2143 Grand Ave, Des Moines, IA 50312. Periodicals Postage Paid at Des Moines, IA, and additional mailing offices. Postmaster: Send address changes to Woodsmith, Box 37274, Boone, IA 50037-0274. Postmaster: Send all UAA to CFS. (See DMM 507.1.5.2); NON-POSTAL AND MILITARY FACILITIES: Woodsmith, Circulation Department, PO Box 37217, Boone, IA 50037" Printed in U.S.A.

Woodsmith® is a registered trademark of Active Interest Media Holdco, Inc.
Copyright© 2025 Active Interest Media Holdco, Inc. All rights reserved.
Subscriptions: $29/year, Single copy: $7.99
Canadian Subscriptions: Canada Post Agreement No. 40038201. Send change of address information to PO Box 881, Station Main, Markham, ON L3P 8M6. Canada BN 82564 2911

WoodsmithCustomerService.com

ONLINE SUBSCRIBER SERVICES

- **VIEW** your account information
- **PAY** your bill
- **RENEW** your subscription
- **CHANGE** your mailing or e-mail address

CUSTOMER SERVICE Phone: **800-333-5075** weekdays

SUBSCRIPTIONS
Customer Service
2143 Grand Avenue
Des Moines, IA 50312
subscriptions@aimmedia.com

EDITORIAL
Woodsmith Magazine
2143 Grand Avenue
Des Moines, IA 50312
woodsmith@woodsmith.com

from the editor

Sawdust

The Skillful Use of Tools — that's how I describe to non-woodworkers what we show in the techniques and projects in *Woodsmith*. Sure, we lure you in with amazing designs and fantastic photos. Behind it all is a drive to teach you how to use a small array of tools to create projects that will be cherished. When one project is complete, I'd like for you to have learned some technique that you can apply to the next project you build.

Two things are at play: first, we want to feel confident and competent when we step up to the tools we have. Second, we'd like that to transfer to a sense of curiosity to take your skills and try something new, and perhaps more challenging. Several of the projects in this issue fall into that category. I'm thinking of the holiday birds, the music stand, and the tray table. Each of those has interesting elements that you may not have encountered. By the end of the construction, you will have become a better woodworker, and have something lovely to show for it.

Let me zoom in a little for a specific example. We often show a spindle sander (or a sanding drum installed in a drill press) to refine curved details in furniture projects. I consider this an important tool to have in a shop. While making the holiday birds, Chris relied on the sander as a carving tool. He used it to do a lot of the shaping, as well as refining. The reason? Carving can feel intimidating for a lot of folk. By using a familiar tool in a new way, it can inspire the confidence to give the birds a try. Even though I've done some carving myself, I plan to fire up a sanding drum in the drill press in my home shop and give this technique a try, too.

Woodsmith Unlimited. We recently relaunched *Woodsmith Unlimited* to open up even more woodworking learning opportunities. You'll find project plans, videos, articles, and access to every season of the *Woodsmith Shop* TV show. Find out more at *www.Woodsmith.com*.

contents

No. 281 • October/November 2025

Projects

ShopNotes project
Lumber Cart 28
Every shop needs more storage. This heavy-duty cart organizes a wide range of sheet goods and lumber cutoffs.

designer project
Music Stand. 36
Elevate the practice time and performance of a musician in your life with this handsome, adjustable stand.

holiday project
Holiday Birds. 44
These three birds offer an ideal first step into the world of carving. Simple tools and friendly materials make it easy.

weekend project
Serving Tray Table 50
A two-part project works as a side table or serving tray. Learn how to manage miters and make round parts.

designer project
Compact Mid-Century Desk 56
Bold angles, soft edges, and great materials combine to create a home office essential you can tuck anywhere.

Departments

from our readers
Tips & Techniques 6
Letters & Questions. 12

finishing room
Smart Paint Tips. 14

woodworking technique
Cut Perfect Curves 18

great gear
New Power Tools & Add-Ons 22

mastering the table saw
Mighty Miters 64

Sources 66

Drill Press Chip Tray

The drill press is probably the toughest tool for dust collection. The rotation of the bit throws chips in every direction.

To make the job easier I made a tray that attached to the front of my shop-made table. I wouldn't call this a perfect solution so much as a management plan. As I work, I sweep dust and chips off the table and into the tray. Not only does this clear the working surface, the debris stays off the floor and gets collected by a vacuum.

SIMPLE CONSTRUCTION. The tray is made from plywood with a hardboard rim. I drilled a hole in the bottom to accept the hose from my shop vacuum.

Harold Ebbletrap
Potter, Wisconsin

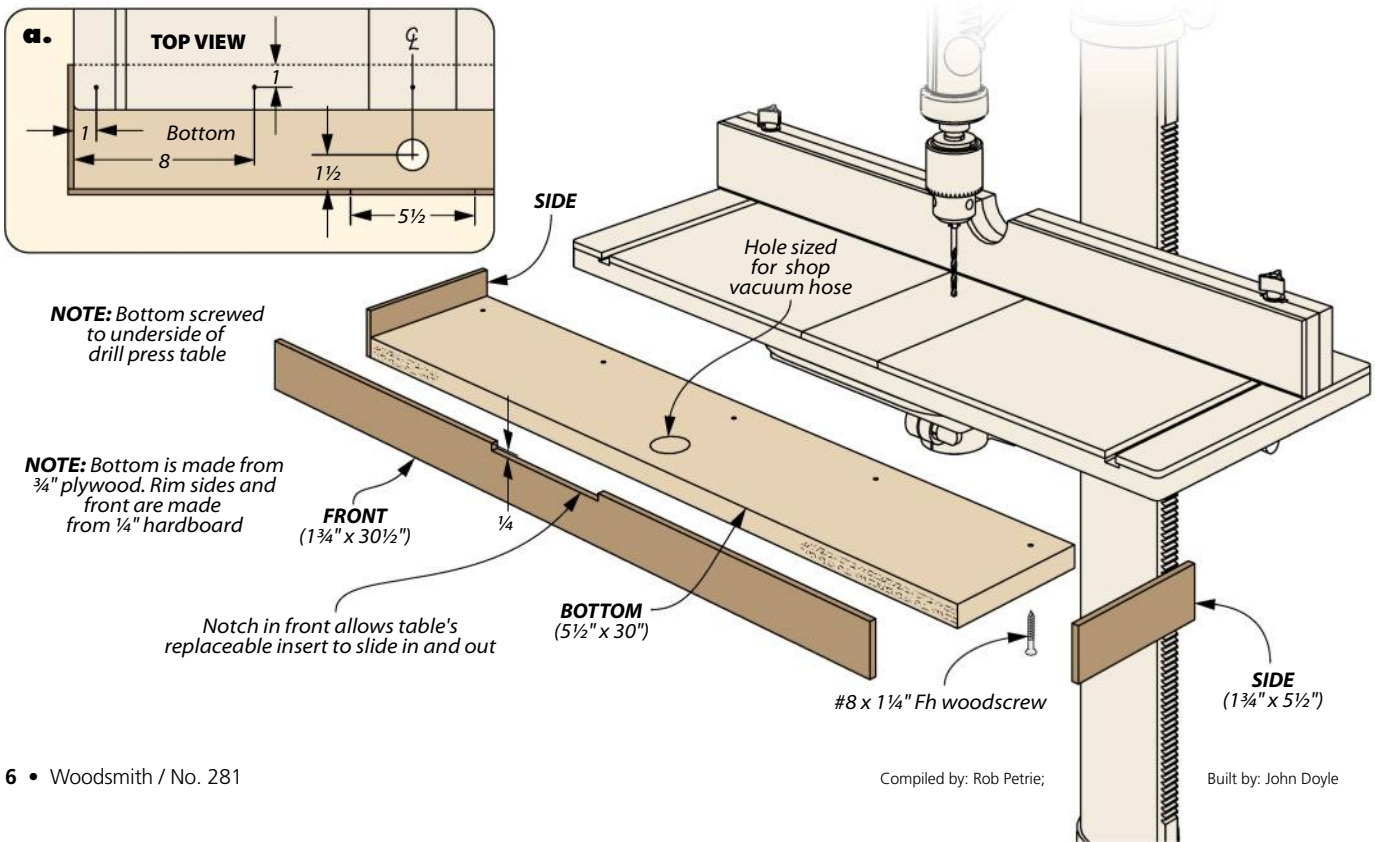

Compiled by: Rob Petrie; Built by: John Doyle

QUICK TIPS

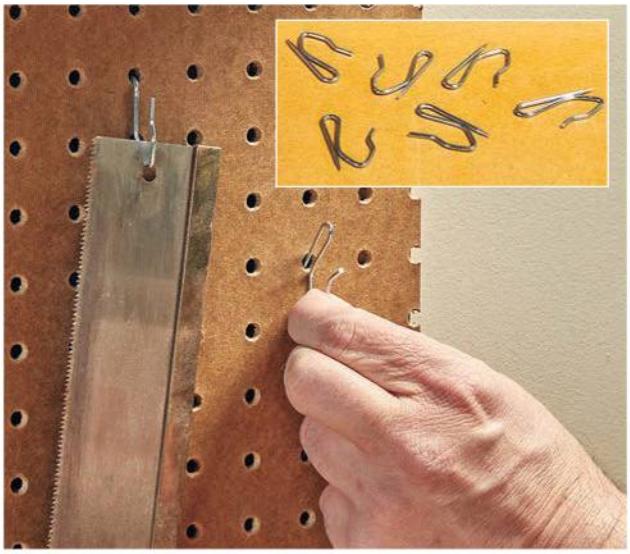

Pegboard Hangups. *Cesar Ramirez of Sanger, TX* Discovered that drapery hooks can be used as low-cost pegboard hooks. Install them upside down to hold a wide variety of tools.

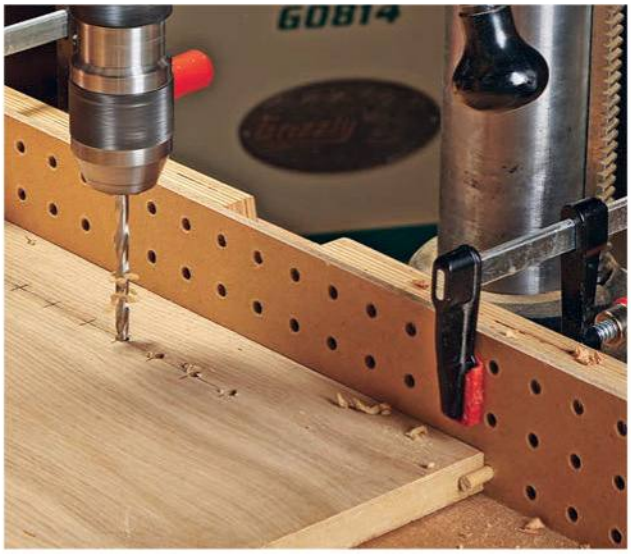

Pegboard Drilling Guide. *Larry Darrelson, of Gulf Shores, AL* prefers to use a drill press for shelf pin holes. For accurate spacing, he clamps a strip of pegboard to his fence. A dowel indexes each hole.

Oneida Air Systems
The Industry Leader in Dust Collection

Some Jobs Are Monsters All On Their Own.

Dust collection doesn't have to be one of them.

Dust Gorilla Pro
SMART Boost Dust Collectors

The Last Dust Collector You'll Ever Need

Reach up to double the CFM and suction power of traditional, fixed RPM collectors with the Dust Gorilla Pro. Its unique Smart Boost technology ensures the motor is always working at full capacity, with a constant amp draw, by increasing fan speed as needed. Truly revolutionary!

N Nana L. Verified Buyer ★★★★★

Worth the upgrade. I've been using the unit for about 3 months now and I can say that this is definitely a case of you get what you pay for. This unit is pulling more air through a 4" line than my previous system was pulling through a 6" line. I strongly recommend getting a unit with the SmartBoost, it makes a huge difference.

SEE HOW

MADE IN USA

Contact us today for your FREE dust collector consultation. 800.732.4065

oneida-air.com

Illustrations: Becky Kralicek

Epoxy Feet

I often make projects with plywood, and three boats later, I know to always seal every seam — especially the edges and cut sides — in epoxy, to prevent water from migrating into the plies and causing premature failure (or leaks).

This principle applies to outdoor furniture. The end grain on table and chair legs wicks up moisture, which leads to decay.

Consequently, I always seal the feet on any deck furniture with a good grade of epoxy, to prevent the feet from rotting. As you can see in the photos, I wrap the legs with tape to create a shallow reservoir. Brush in a thick mix of epoxy. Allow it to cure before removing the tape and sanding the epoxy flush.

Cliff Moore
Jacksonville, North Carlina

DIGITAL WOODSMITH

RECEIVE FREE ETIPS BY EMAIL

Now you can have the best time-saving secrets, solutions, and techniques sent directly to your email inbox. Simply go to: ***Woodsmith.com*** and click on,

Woodsmith eTips

You'll receive one of our favorite tips by email each and every week.

SUBMIT A TIP TO WIN

GO ONLINE

If you have an original shop tip, we would like to hear from you and will consider publishing your tip in one or more of our publications. So jump online and go to:

SubmitWoodsmithTips.com

You'll be able to tell us all about your tip and upload your photos and drawings. You can also mail your tips to "Woodsmith Tips" at the editorial address shown on page 2. We will pay up to $200 if we publish your tip.

QUICK TIPS

Easy Clamp Selection. Bar clamp heads look the same no matter the length. To eliminate the frustration, *Dan Martin* of *Galena, OH* writes the length of the clamp on the top of the head. A silver-colored marker is the way to go here. It stands out from the black-painted clamp head and is easy to read from a distance.

Non-Stick Glueups. *Dan Martin* of *Galena, OH* uses risers to support panel glueups. This gives him room to maneuver clamps without shifting the boards. He just doesn't want the boards to stick to the risers. His solution is to apply a strip of packing tape to the top of the risers. Any glue flakes right off. When the tape gets too beat up, he can peel it off and add a fresh layer.

STRONGER

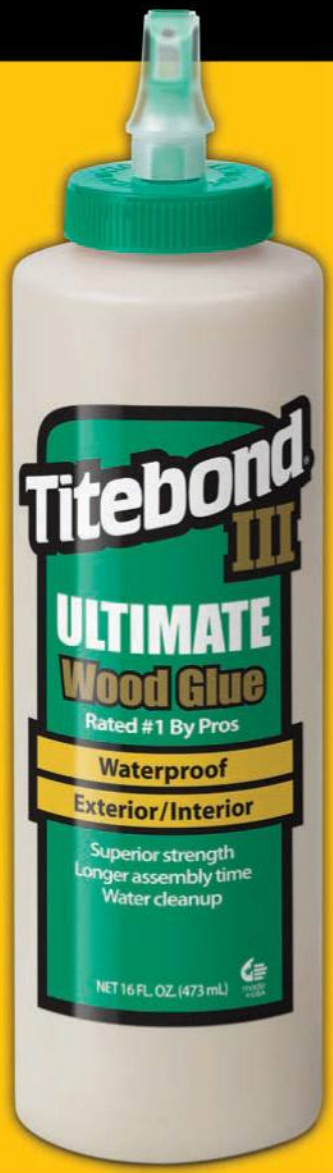

RATED #1 BY PROS

Ultimate Performance

1.800.347.GLUE

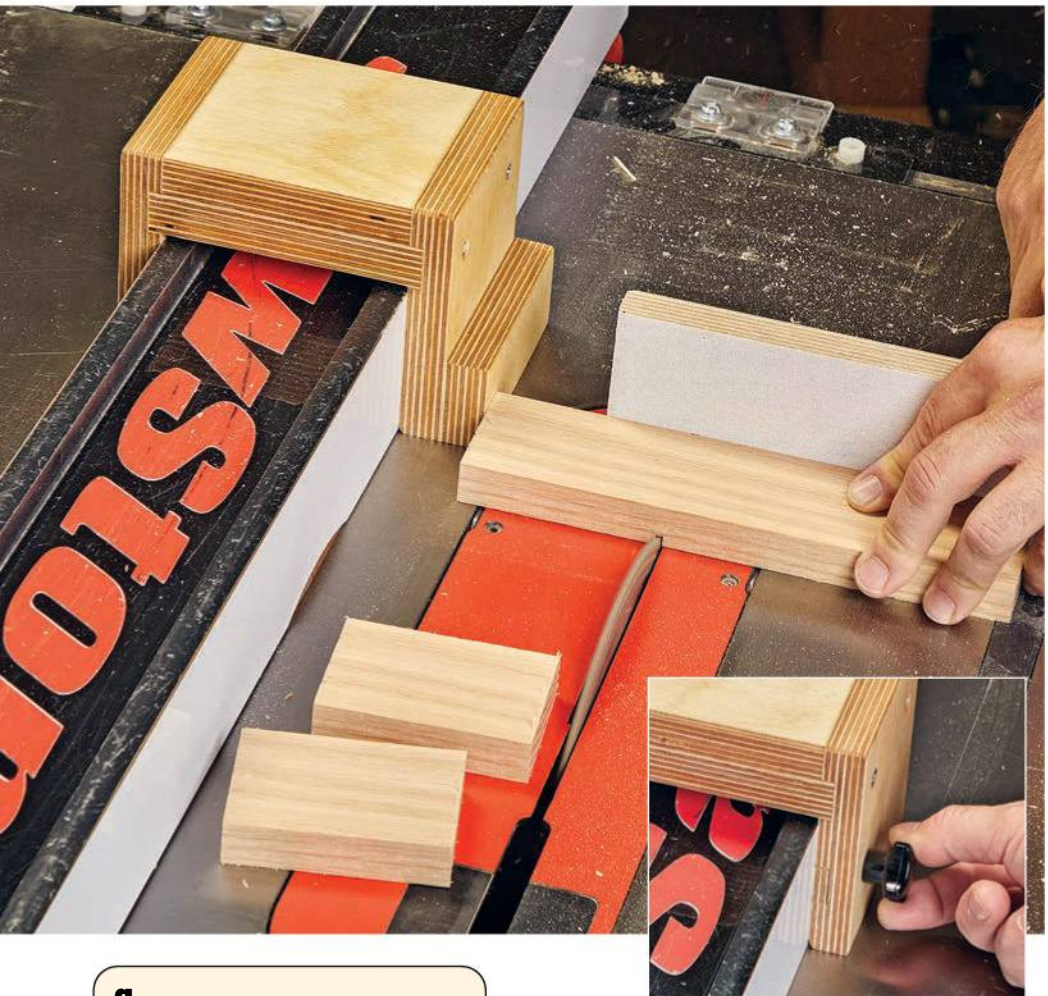

Safe Crosscuts

When crosscutting multiple short pieces to length on the table saw, it's common to clamp a scrap block to the rip fence before the blade as a standoff for setting the length. This prevents the piece from getting trapped between the blade and fence.

I made a self-clamping standoff block that takes the concept one better. Instead of fiddling with a clamp to attach the block, it slips over the rip fence. Tightening a knob engages a built-in clamp that secures the setup block to the fence (inset photo).

The body is a plywood, U-shaped assembly that's sized to fit over the rip fence. The drawing below shows the construction.

To make the clamp mechanism, cut a dado in one side to house a pressure bar. A T-nut installed in the dado houses a studded knob that pushes the strip against the rip fence to lock the block in place, as in detail 'a.'

Tom Hintz
Concord, North Carolina

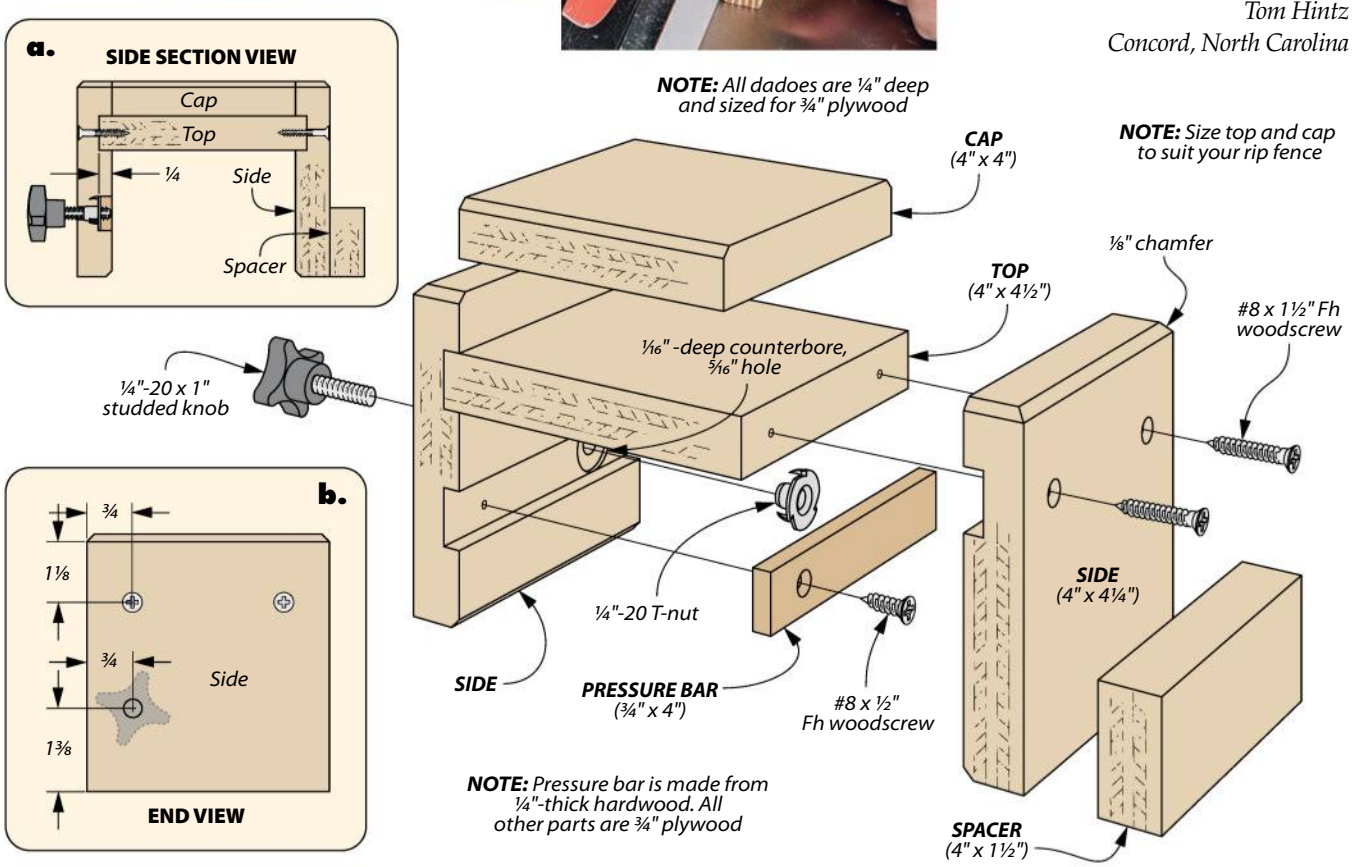

Cord Control

Perhaps the hardest part about storing portable power tools is figuring out what to do with the cord. The cords too easily turn into a rat's nest inside a drawer or cabinet. I've tried hook-and-loop straps and they seem to wear out, get loaded with sawdust, or break.

Then I rediscovered this classic method of cord control. In a nutshell, it's a way to wrap the cord around the tool that not only keeps it under control, but also creates a loop that you can use to hang the tool from a hook, as shown in the photo at left.

The photo sequence below walks you through the steps. The hanging loop can be as large or as small as you want. About the only limitation that I've found is that the design of some tools limits how well the cord wraps around the body of the tool. However, it works great for tools like sanders, biscuit joiners, corded drills, and reciprocating saws. Other tools require more creative wrapping to work.

Joe Smith
Austin, Texas

The Loop. Make a loop with the cord that folds over the tool's body.

Wrap. Begin wrapping the remaining cord around the tool away from the end.

Plug. Slip the outlet plug through the small end of the loop.

Cinch It. Gently tug the lower loop end to secure the plug for hanging.

FASTER

IMMEDIATE RESULTS
Tough & Impact Resistant

1.800.347.GLUE

Comments & Questions

DRILL PRESS SPEED

What is the recommended RPM for the drill press sharpening station in Issue 107 of *ShopNotes*?

John Marcus

Hi John, thank you for your interest in the Drill Press Sharpening Station. On page one the article mentions running the drill press on its lowest speed, which is good advice. I built this project and although it has been a few years, I remember that the best speed range was 300-500 RPM. At higher speeds there can be issues with heat buildup at the tool edge and any inaccuracies in the building process can make the plate vibrate which reduces the efficiency of the process. Using slow speeds doesn't mean that the sharpening process will be slow provided the appropriate grits of paper are used. Just as with hand sharpening on stones sometimes a touch up with a fine grit is all that is needed and sometimes you have to work though all of the grits.

All the best,
Chris Fitch
Creative Director

ANGLE CALCULATOR

Dear *Woodsmith* Staff, I am an enthusiastic reader of *Woodsmith* magazine, and I also enjoy the TV shows and website. I like both the technical and craftsman detail in the articles that you publish. As a result, I have a great deal of respect for your staff and work.

Several years ago, I became interested in two projects. One was a folding table and the other was wooden containers and buckets. There is a large number of videos on *YouTube* associated with both projects; however, I was unable to find a source for designing either project for an arbitrary size. All of the sources I could find were for a given size.

I am an engineer, so I developed the equations for the part dimensions for any size of the tables and containers. I wrote a paper for each topic to document the process for my children and grandchildren and for me if I forgot the techniques. I am attaching a PDF version of each paper. I realize that the papers are totally inappropriate for any of the venues used by *Woodsmith*, so I am not asking that they be considered for publication; however, I thought that some of the staff might be interested in them as projects. They can be very useful household items and are easy to make if the spreadsheets are used to determine the dimensions. Of course, if they are of no interest, you can simply delete this email.

I do like reading the magazine and web page, and I thought that the woodworkers on your staff might enjoy a diversion with these simple but useful projects.

Thanks.
Gary Kinzel

Hi Gary, thank you for reaching out and sending the papers. Just last week I was having a discussion with Dillon Baker (Design Editor) about compound angles, as he is designing a music stand with a tapered hexagon as a base (refer to page 36). He solved the angles through trial and error using Inventor, *our CAD program. I've done this for projects in the past as well, but it is not an "elegant" method. So, your article is very timely and I'm glad to have it as a resource — thank you! I will also save the folding table article because folding tables are very handy and might well make a good project for* Woodsmith.

All of us here at Woodsmith *appreciate your interest in the magazine and* Woodsmith Shop*!*

All the best,
Chris Fitch
Creative Director

TORSION BOX EXTENSION

I am looking at building the double-duty (torsion box) planer sled. The plans I downloaded show the length of the sled at 48 inches. I need to plane down boards that are 90 inches long. Will the sled be stiff enough using the long fillers and short filler strips set flat (¾" face down) with top and bottom made from ¼" MDF glued and screwed as shown in the plans? Or, will I need to set the long and short fillers installed with the long face 1¾" vertically, with additional spacers similar to the torsion box built by "Murphy's Creations"?

Murphy used ¾" x 3½" fillers. I do not want to build the sled following the plans from *Woodsmith*, but changing the length from 48" to 96", and discover that the sled is not flat and dead level.

David Watts

Hi David, I think you have things figured out. The torsion box construction needs to be changed to accommodate the new length. I would think that fillers set on edge with a width of 1¾" – 2¼", depending on the stiffness of the material you are using, with an additional 2 fillers should be fine.

I always enjoy hearing when builders change and modify our project for their own needs.

All the best,
Chris Fitch
Creative Director

JEWELRY BOX FOOT

Hello Mr. Huber:

I'm a *Woodsmith Unlimited* member and an avid reader of the magazine. I have a question on the jewelry box you made, shown at the bottom of page 65 of Issue 279.

My question is: What tools/technique did you use to obtain the very small and gentle flare-out curve at the bottom of the feet?

Any information you can share would be most appreciated.

Many thanks,
Ralph

Hi Ralph, good eye. That detail isn't easily noticeable unless you see the box in-person. While a simple mitered base would have worked, I wanted something a little more on this box. The look I was going for resembled a traditional-style bracket foot, just on a smaller scale.

The solution is to use a round nose bit. This bit looks like a core box bit with extended side-cutting flutes. As you can see in the photo below, a small portion of the bit is exposed. This creates a flat surface with a rounded kick out for the foot.

I made this cut in a series of passes. Raise the bit slightly between each pass in order to achieve a clean cut and not tax the router motor or burn the workpiece.

Stay well,
Phil Huber
Executive Editor

Adding Paint to Your Projects

Sometimes paint can make all the difference for a woodworking project, adding color that catches and delights the eye, expressive patterns that create style, and fine details that inform the viewer. Difficult? Not at all. Decorative painting only takes a modest number of paints and brushes for most projects and the basic skills to handle those tools are easily learned.

I'd like to share with you the products and tools that I use to make decorative paintwork a simple and enjoyable process, transfiguring a project from plain to magical.

Written by: Chris Fitch

EXCELLENT ACCURACY & RELIABILITY

QUALITY TOOLS
SHOP FOX®
SINCE 1989

Quality machines with proven performance.

grizzly.com/shopfox

TWO YEAR WARRANTY

Available at these fine retailers:

grizzly.com · JB TOOLS · ACME TOOLS · THE TOOL NUT

& MORE!
See website for details

▶ Small flat brushes lay paint down with good control and consistency.

◀ Flat Utility brushes apply finishes smoothly over large areas.

PAINT

My paint of choice is fluid acrylics. Fluid acrylics offer ease of use, endless variety of colors choices, and come in convenient squeeze bottles that allow you to use just the paint you need with no waste. These paints are water based, so no solvents, which means no smell, low toxicity, and easy cleanup. They are widely available in craft stores or online. Most fluid acrylics are made for interior and exterior use, but if your project is to go outside, check the lightfastness (resistance to fading) rating on the paint's label. Ratings are given as ASTM (American Standard Test Measure) 1 (excellent), 11 (good), and 111 (poor).

▲ Use paint that carries an ASTM rating of 1(excellent) for lightfastness for outdoor projects.

BRUSHES

Paint brushes come in a bewildering array of shapes and sizes. However, I find a set of six brushes takes care of my painting needs. Here is what I recommend: 3/0, 3, and 9 round brushes, a liner, a ¾" flat, and a 2" flat utility brush, all with synthetic bristles.

ROUND BRUSHES. The most traditional of the brush shapes, a round paint brush feels like a pencil in your hand, so it offers excellent control. Round brushes are useful for painting thin to thick lines and for creating details, washes, and fills. Round brushes can have a rounded tip or a slightly pointed tip. The rounded tip can be used vertically to easily create perfect dots of paint for eyes or berries, or for filling areas and creating thick lines. Pointed rounds, are ideal for creating details with more precision.

Round brushes are numbered according to their size. The 3/0 brush is small and used for fine detail work. A #3 round brush works well for tight patterns and filling small areas. The number 9 round brush features size and heft. It can carry a lot of paint making it a great brush for dealing with large, organic shapes.

FLAT BRUSHES. Flat brushes look square and have a medium to long bristle length. Flat brushes are easy to maneuver and manipulate, making them the perfect brushes when you need to cover a bit of space with good control and lay down color smoothly and consistently.

The flat face works for blocking in solid shapes of color, but you can also turn the brush on edge to create fine lines. I like to use a flat brush for adding texture to a painted surface. For my painting kit, I have chosen a ¾" wide flat brush.

LINER BRUSH. I often use natural or organic patterns incorporating vines, flowers, and grasses on my projects, and that means painting smooth, sinuous lines. This is where the liner brush excels. The bristles of all liner brushes are soft, long, and taper to a needle point at the end, allowing it to absorb the impact of any small, unwanted shakes or movements from your hand, so you can confidently lay down smooth and even lines. The long bristles apply paint with very little pressure and hold a lot of paint, avoiding lap marks.

◄ Liner brushes are used to create long, sinuous lines in paint.

LARGE FLAT UTILITY BRUSH. It's always good to have a large brush on hand. Little brushes do well with little things but sometimes you need a big brush to lay down paint, sealers, and clear finishes with smooth, sweeping strokes to cover large areas with ease. A large flat brush is also handy for decorative effects, such as glazing, dry brushing, and texturing. Flat utility brushes are inexpensive and available in many sizes. I find a 2" size works best for my work.

APPLICATION

Just like with stains and varnishes, painting requires preparation. Sand your work to a fine finish, fill any flaws, and remove all the dust. For most projects the paint can be applied directly to raw wood, however, sometimes a sealer coat of thinned varnish or shellac can be useful to fill the grain and prevent it from raising when using water-based paint.

Exterior work should always receive at least one coat of primer. Primer is designed to adhere to raw wood and provides a clean, even base on which to apply paint. Bright white primer can sometimes be tough to cover without multiple coats, so I find it useful to use gray primer.

Before starting a project, spend time getting comfortable with the paint and brushes first. Working on a piece of scrap material, practice any designs or details, teach yourself how to handle the paint and brush and develop an order to the process. Here is a tip I have learned: Before adding decorations and patterns, seal the base coat of paint with spray lacquer or clear water-based finish. This way if things go wrong, the mistake can be wiped off using a damp cloth without having to repaint the base color. Another tip is to always apply the light colors first and overlap them with the darker, hiding colors for sharp, clean separation lines.

Learning how to use new materials and new techniques opens doors for us to enjoy woodworking more, so think about adding paint to a project. It is great fun and with the right paint and brushes, surprisingly easy. W

▲ Apply light colors first followed by dark for clean color separation.

▲ Round brushes are useful for fine details, lines and patterns, and filling areas with color.

Perfect Curves on Small Workpieces

▲ All that's needed to make "perfect" circles is a sheet of plywood, a piece of rod, and a router bit. Two holes were drilled. One is for the router bit and the other is for the bit height adjustment. Here, we used a ¼" piece of brass rod for the pivot and a ¼" upcut bit to make our cuts.

There are many ways to cut circles in woodworking, but choosing the appropriate procedure is paramount to the quality of cut. This decision is usually dictated by the scale of your work. When dealing with larger pieces, an adjustable trammel is one of the first jigs I grab to make precise radial cuts. The simple, yet adaptable system allows you to bring the tool to the workpiece and makes cutting out large diameter pieces — accurately — a breeze.

On the other hand, smaller parts with tight radii warrant a similar strategy, however, often propose challenges due to the scale of the tool being used in relation to the diminutive size of the piece being cut. The music stand project on page 36 has two identical pivot brackets that require such a setup. A solution to this is a two-step process which makes the task of cutting these small parts both safe and exact. To do so, a band saw was used in conjunction with a shop-made router jig that makes both the exterior as well as interior radial cuts needed to complete the part. Follow along as we discuss a couple of options (both shop-made and purchased) that are up for the task.

Written by: Dillon Baker

Woodpeckers®

MADE IN USA

Woodpeck.com

Precision Woodworking Squares

- One-piece central core.
- Stainless model includes scribing guides.
- Lip keeps the square flat on your work.
- Guaranteed perpendicular to ±.0085° for life.
- Available in inch or metric.

Precision Woodworking Square
Includes a wall-mountable Rack-It®
12"....$139.99
12" Stainless Steel....$159.99
Other Sizes Available on ***Woodpeck.com***

Precision Woodworking T-Squares

- Scribing guides on 1/16" centers.
- Beveled edge reduces parallax.
- Tight tolerance laser-engraved scale.
- 600mm metric version available.

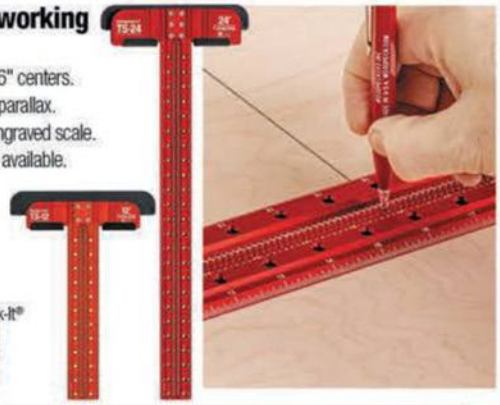

Precision T-Square
Includes a wall-mountable Rack-It®
TS-12 12"....$139.99
TS-24 24"....$159.99
TS-32 32"....$189.99

in-DEXABLE® Combination & Double Squares

- Push-button index locks head at any full-inch.
- Laser-cut scribing guides for precision parallel lines.
- Retractable support keeps head aligned to your stock.
- Available in inch or metric.

in-DEXABLE Squares
Includes a wall-mountable Rack-It®
Double 6"....$139.99
Center Finder 6"....$149.99
Combination 12"....$179.99
Protractor 18"....$249.99
Other Sizes Available on ***Woodpeck.com***

Joinery Sled

NEW TOOL

- Half-Laps, Bridle Joints, Sliding Dovetails, Tenons & More!
- Works with table saws & router tables.
- Patented leaf spring miter bar fits all 3/8" x 3/4" miter slots.
- Table adjusts from 44° to 91°.
- Micro-adjuster postitions vertical table precisely.

Joinery Sled....$319.99
Includes a wall-mountable Rack-It®

Rout-N-Plane® Benchtop Board Mill

- Perfect for end grain cutting boards.
- Adjusts to work with almost any size or style router.
- Two sizes: 15" and 24" wide. Both work from 3/4" to 3" thick.
- When it won't fit your planer, plane it with Rout-N-Plane!

Rout-N-Plane Benchtop Board Mill
15"....$179.99
24" XL....$219.99

Router not included.

Router Plane

- Includes square & spearpoint blades.
- Blades lapped perfectly flat. Bevels ground and ready for final honing.
- 12 blade positions ensure maximum access & support.
- Fine-thread adjustment with no backlash.
- Ductile iron base with black-nitride treatment.
- Optional fence keeps plane parallel to an edge.

Router Plane
....$279.99
Fence Add-On Kit....$69.99

ULTRA·SHEAR® by Woodpeckers

ULTRA·SHEAR
FREE SHIPPING
ON ROUTER BITS & SAW BLADES
US 48 States only. Ultra-Shear brand only. Cannot be combined with other products.

Finger Grip Groove Bits

These bits create a subtle concave recess in the edge of your cutting and serving boards. Bearing controls depth of cut.

Carbide-Tipped, Finger Grip Groove Bits, Round, 2-Flute
1/2" Shank *for 1-1/4" boards....~~$54.17~~* **$46.99**
1/4" Shank *for 3/4" boards....~~$48.05~~* **$39.99**
1/4" Shank *for 1" boards....~~$51.93~~* **$43.99**
More Router Bits are available on ***Woodpeck.com***

Flat Top Grooving Saw Blades

ULTRA·SHEAR® by Woodpeckers

When you need flawless, flat-bottomed cuts, our 40-Tooth Flat Top Grooving Blade delivers. The chisel tooth design yields a perfectly square groove.

10" x 40 Flat Top Grooving Blade, 5/8" Arbor
1/8" Kerf....*~~$166.78~~* **$129.99**
3/16" Kerf....*~~$186.83~~* **$149.99**
1/4" Kerf....*~~$196.86~~* **$179.99**
Other Saw Blade options available on ***Woodpeck.com***

Visit ***Woodpeck.com*** *for hundreds of other American Made Tools!*
Woodpeckers, LLC • Strongsville, Ohio • 800·752·0725
Prices are subject to change without notice.

Also Available at Your Local Woodcraft Store! WOODCRAFT®

The nice thing about shop-made jigs is that they can be created using materials that are readily available and rendered too small for other projects. We all know there is a stash of scrap in every shop that has made the empty promise of becoming a hypothetical project some day. So take this opportunity to be the person you lie to yourself about being and use what 's been gathering dust, and turn it into something functional.

If, on the other hand you happen to be someone who prefers the confidence of a store-bought option, there is a jig available that makes quick work of all things circles — small to medium-sized in diameter.

SHOP-MADE JIG FOR THE JOB

To create the circle-cutting jig used for the music stand, all that is required is a piece of ¾" plywood and ¼" dia. rod. I started by cutting the plywood to the length of my router table top so that I could easily and securely clamp on both sides. Then, two 1¾"-dia. holes were drilled to allow for the router bit to pass through, as well as for the height adjustment wheel to be accessed. Between those two holes is a ¼" hole that acts as the pivot point for the two brackets. Note: the two holes drilled for the router bit and adjustment wheel will be contingent on the setup you have, so take note of their locations and drill them accordingly.

Once you have established the hole locations, drill the pivot hole 1½" from the center of the router bit hole. This will provide you with enough room to move the jig to sight the two separate cuts. Place the pin and affix the jig to your table top.

In step 1 you'll notice a printed pattern was used. This saves time

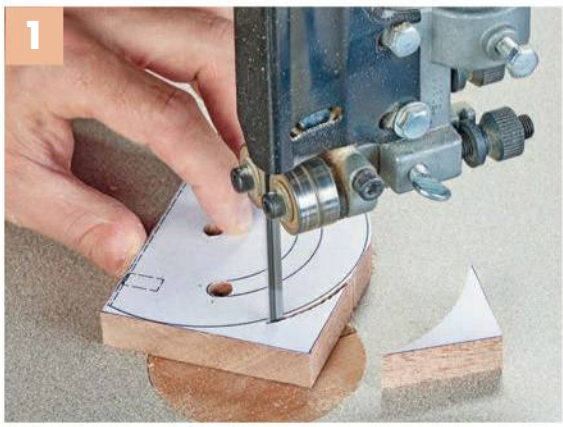

▲ Remove the waste using the band saw. This will help cut down on the amount of passes performed at the router.

▲ Pilot holes were drilled at both ends of the pivot slot. This acts as a locator window that assists with jig setup.

USING A JASPER CIRCLE-CUTTING GUIDE

▲ **Mount the Jig.** Using the included locating pin and calibrating disk, mount the jig on the router.

▲ **Locate the Pivot Pin.** Drill a ⅛"-dia. hole in the workpiece. Then insert the pin in the proper hole in the jig.

▲ **Rout the Circle.** Position the pin in the centered hole, plunge the router, and complete the circle.

and ensures accuracy with your cuts. Continue by placing the blank onto the pivot pin and adjust your jig to locate the two pilot holes seen in Step 2. Once you have sighted the first hole, start with a bit height of about ⅛" and rotate your piece until you reach the corresponding pilot hole (Step 3). Continue by raising the bit until you have cleared through the blank. Repeat this for the second bracket.

To complete the brackets, readjust the jig to make slight contact with the profile's exterior. Then make a finishing pass using the refrence on the pattern as your guide (Step 4).

JASPER CIRCLE CUTTING JIG

Another great option for cutting small circles that is commercially available is the *Jasper* 240 Pro circle-cutting jig seen on the bottom of the previous page. This is an inexpensive ($39.95) remedy if you are someone who cuts small parts frequently. It has the ability to cut 256 different-sized precision circles ranging from 1" to 18 3/16" in diameter. It's made from hardened acrylic and is compatible with over 47 different plunge router bases. If consistent and precise circles are part of your woodworking regimen, a more permanent jig like this one is more than worth adding to your arsenal of tools. Whichever option you choose, both will have you cutting small circles like a pro with minimum setup. W

Continue to raise the bit about an ⅛" and make several passes until the slot is exposed. This is not only good practice, but also ensures a smooth and accurate cut.

Clean up the band saw marks by rotating the blank into the cutting rotation of the bit. Move slowly to avoid tearout against any exposed end-grain.

Top-Tier Power Tools

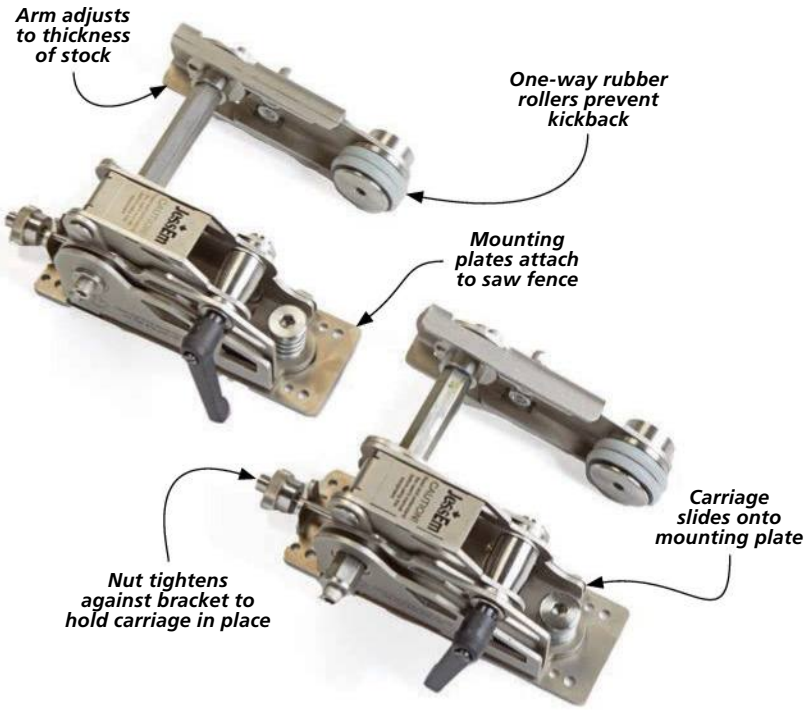

In most woodshops, power tools are the real movers and shakers, the true workhorses, the meat amongst the potatoes. I enjoy hand tools for a variety of reasons, but there's no denying the precision of a table saw or the efficiency of an orbital sander. In this article, you'll find a few familiar tools and accessories, as well as one (shown above) that you may be unfamiliar with. However, we'll begin with an accessory for one of the most tried and true power tools first.

STS STOCK GUIDES

The STS Stock Guides (shown at left) are a recently released table saw accessory from *JessEm*. This pair of guides attaches to the rip fence of your saw. Put simply, each guide has an adjustable arm with a rubber roller.

Written by: Rob Petrie

▲ The mounting plates screw into the rip fence of your table saw. The stock guides slide onto the mounting plates when needed, locked in place by a nut in the back.

▲ The carriage assembly allows the adjustable arms to pivot down to the thickness of the stock being cut. A lever on the right side of the guides tightens down to keep the arms set at that thickness.

The arms are tilted in slightly toward the rip fence (you can see this in Photo 3 at right). This keeps force steadily applied toward the fence and the table throughout the cut, which makes for safer and easier cuts on larger pieces of stock.

HOW THEY WORK. The roller arms attach to a carriage, which is seated on a mounting plate. The mounting plates are semi-permanent fixtures, as they're screwed directly into your saw fence. When needed, the guides slot into a series of tongues on the mounting plates (Photo 1 above). A small threaded rod with a nut is attached to the carriage of the guides, and tightens against a bracket on the mounting plates to lock the guide in place.

The arms are then set to the thickness of the stock (as in Figure 2). After adjusting the arms until the rollers are tight against the workpiece, a lever on the right side of the carriage tightens down to hold the arm in place. Once both guides are set, they're ready to make the cut.

PERFORMANCE. So, how well do the guides actually work? In practice, I wouldn't use them for every cut — but that's why they're easy to remove. They hold the workpiece well enough that you can make the cut safely with just one hand (or push stick). Where the guides really shine, in my opinion, is on longer boards or large panels. Not only do they make for a safer cut on unwieldy pieces, but they also hold the piece in position quite well. This means long boards with a bow are still getting cut evenly, and you won't jostle the workpiece if you pause to reposition or grab a push stick during a cut, preventing burn marks. They're well-made pieces of 304 stainless steel, and functionally take the place of a featherboard and a riving knife, all in one package.

▲ The arms on the stock guides are canted in toward the rip fence at 5°. As the workpiece is pushed through, the arms keep it pulled tight against the fence, making for safe and easy rip cuts on a variety of different stock.

◀ The arms keep the workpiece tight to the table throughout the cut, while the one-way bearings on the rollers help to prevent possible kickback.

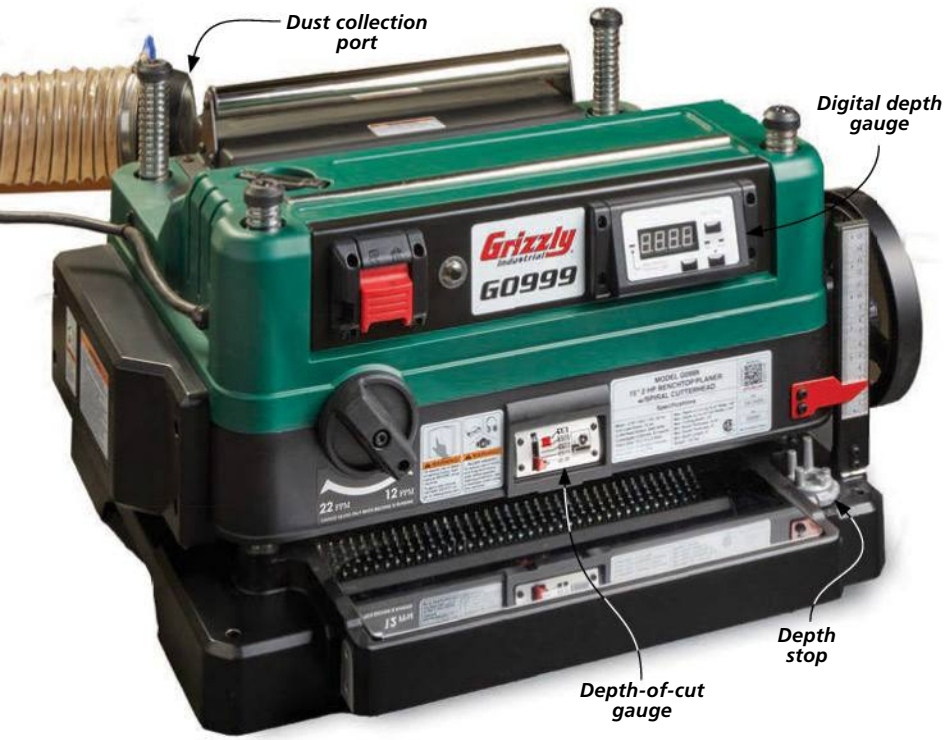

▲ A depth stop and a digital readout gauge help you maximize precision when milling down stock, no matter how many pieces you need.

GRIZZLY BENCHTOP PLANER

There are good reasons to use a benchtop planer over a standing one. Namely, those would be cost and shop space. When a benchtop planer can be stored neatly under your workbench or in a cupboard — and costs nearly half as much as its full-sized counterpart — a slight reduction in performance isn't a tough pill to swallow. However, *Grizzly*'s G0999 Benchtop Planer shown here has the power and capacity of a standing planer with the portability and minimal footprint of the benchtop variety.

A PORTABLE POWERHOUSE. The G0999 has a 2HP motor and a 15"-wide bed, granting it plenty of power and a capacity to rival many standing planers. Additionally, it features a spiral cutterhead with carbide inserts that can be easily rotated or replaced as they dull (Photo 1).

While I've referred to this tool as portable, it's not necessarily one I'd go toting around jobsites. Weighing in at a little over 130 pounds, my preference for keeping it portable was to place it on a rolling cart that could be moved around the shop as necessary.

PRECISION GAUGES. One aspect I applaud on this planer are the gauges and stops that aid in precision thicknessing. As shown in Figure 2, the planer features both an analog and digital readout depth gauge. Alongside that is a rotating depth stop (Figure 3). A depth-of-cut gauge sits above the bed as well. This measures how much is being taken off at a time, which is great for dialing in a smooth surface.

PERFORMANCE. In terms of performance, I found little to complain about in this planer.

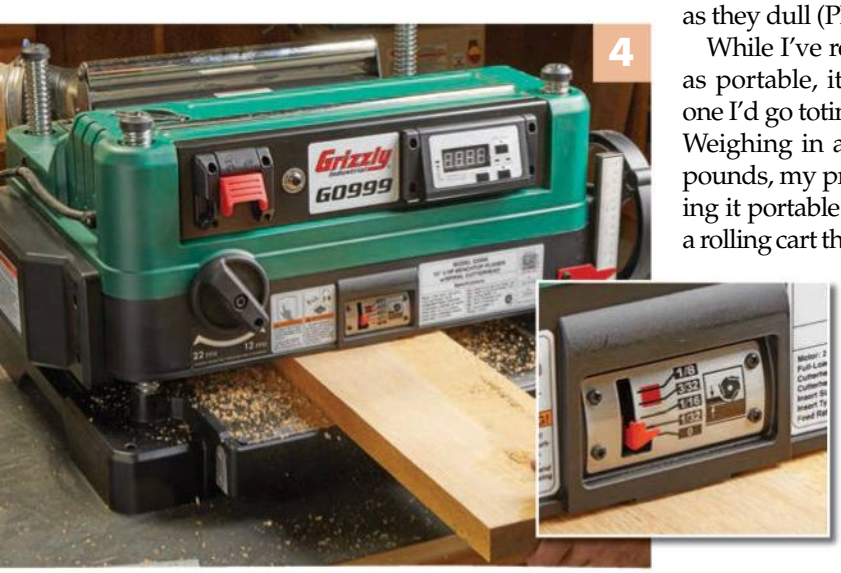

◀ The planer offers a 15"-wide bed. The gauge above it measures the depth of cut as the workpiece passes through, letting you know if you're removing too much.

The cutters leave a clean surface and the motor has more than enough power to take a decent layer off of hardwoods in a single pass. Is it worth a buy? I'd say yes, but there is an important consideration. *Grizzly* makes high-quality tools, and their products are priced accordingly. As such, the G0999 has a pricepoint equivalent to standing planers of some mid-tier manufacturers. With that in mind, I found it outperformed many of those, and if the cost is something you can stomach, then this planer is a great way to achieve the quality of a standing planer without committing to a permanent spot in your shop.

GRIZZLY BRUSH SANDER

The next tool to look at is one that may be unfamiliar to many — it was my first time using one when I gave this one a go. What you see on this page is *Grizzly*'s G0400 Brush Sander. Simply put, this tool functions similarly to a thickness sander, except that it utilizes abrasive brushes to do the work.

BRUSH-BASED SANDING. As you can see in Figure 1, the brush this sander utilizes has compound nylon abrasive bristles. The ends have the abrasive exposed to do the sanding, and as they wear away fresh abrasive is exposed to maintain its usefulness. While the sanding this does is much less aggressive than something like a thickness planer, the bristles conform to a variety of shapes, making them excellent at sanding down strips of molding or cabinet doors.

The brush heads come in a variety of grits, and even a few different styles. The one you see here is what the product ships with, though *Grizzly* also offers a less aggressive flap-wheel style spindle, as well as a more aggressive steel-wire brush spindle.

TO BUY OR NOT TO BUY? What you'll get out of this brush sander is largely dependant on the work you do. It's not a tool that I'd recommend to the average woodworker. The G0400 excels at sanding, buffing and polishing irregular shapes *en masse*, and for a woodworker who makes a single project at a time, this will be overkill. By contrast, anyone who does large-scale work or frequent commissions could easily see the benefits. Sanding down strips of custom molding, cabinet doors, or CNC-carved designs are all perfect tasks for this brush sander, and if you need to sand a number of these at once then this tool will certainly pay dividends.

1

▲ The brush sander utilizes a spindle-mounted brush. Each bristle ends with a small, fine abrasive pad that sands and polishes what passes through.

2

▲ After releasing the tension lever and removing the acorn nuts from the pillow blocks, the spindle can be removed as a whole for easy changes.

3

▲ Variable speeds for both the spindle and conveyer let you dial in the perfect settings for your material.

4

▲ The adaptive nature of the abrasive brush is great for sanding irregular shapes, such as molding, cabinet doors, or CNC carvings.

EKASAND RANDOM ORBIT SANDER

Sanding is an inescapable task in woodworking. I doubt it's anyone's favorite part of a project, but it's one that always needs done. And, as such, I find it's almost always worth taking a look at what new sanding tools are on the market.

EKASAND SANDER. When *Uneeda* contacted me about trying out one of their "EKASAND" (or E-series) line of sanders, there were quite a few options to choose from. They produce a variety of detail and orbital sanders, both electric and pneumatic, but I decided to test out their line with the kind of sander I use most often: a 6" electrical random orbit sander.

You can see the sander they sent me above. The motor can be run at four maximum speed settings (Photo 1) for different materials, but the top speed of 10,000 RPM serves best for hardwood, and it's where I imagine most woodworkers will keep theirs set. There is one feature of an orbital sander I consider key that you may notice is missing above. Unbeknownst to me until it arrived, the model I ordered did not come with a vacuum attachment. *Uneeda* does offer the same model with a vacuum attachment, and I'd strongly recommend it if you're like me and don't use a downdraft table.

PERFORMANCE. In terms of perfomance, the E-series sander certainly puts in the work. There's no lack of power when it comes to the motor, and the hook and loop pad makes swapping out different grits as you work easy. The variable lever adjusts the RPMs up to the maximum speed setting based on the pressure applied (Photo 2). This lets you ease into the max speed, avoiding scratches that can result from the jerking motion of a sudden start.

One key marketing feature for the E-series sanders is ergonomics. I can say that I do enjoy the shape of the handle, and I prefer a low-profile sander like this. With a weight of about three

▲ This orbital sander features four speed settings. The top speed (10,000 RPM) is ideal for most hardwoods.

▲ The variable on/off lever adjusts the sanding speed up to its maximum based on the pressure applied.

▲ The E-series sander outputs as much power as any high-end competitor, but with a notably lower pricepoint.

pounds, this sander is slightly heavier than the average of its competitors, but not so much that it wore me out to use.

ASSESSMENT. The E-series sander is a useful tool, and is capable of outputting as much power as other high-end electric orbital sanders. Looking at pricepoint, it's definitely a tool for professionals, though the E-series line is notably less expensive than many other high-end sanders on the market. If you're searching for a high-quality detail or orbital sander that won't break the bank, you won't go wrong with one of these — just be sure you get one with a vacuum attachment if you need it.

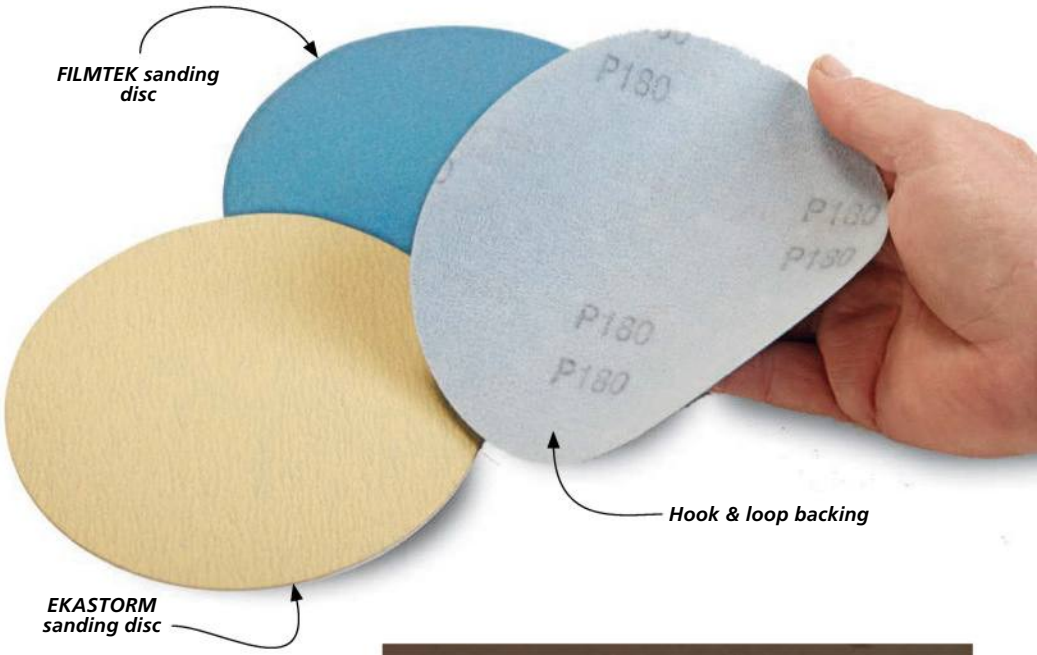

UNEEDA SANDING DISCS

Along with the sander, *Uneeda* also sent me a combo pack of their sanding discs. These come in two varieties, and are worth a brief look.

PAPER-BACK VS FILM-BACK. The yellow discs (called EKASTORM) are paper-backed, making for a more affordable disc than their couterparts, and are great for sanding through the lower grits. The blue discs (FILMTEK) have a durable, waterproof film backer. Although they're pricier, they're great for sanding with higher grits, between coats of finish, or for doing any wet sanding outside of woodwork. W

▶ Both kinds of sanding discs can be ordered with either hook and loop backers or PSA backers for vinyl-faced sanders.

KREG QUICK CLAMPS

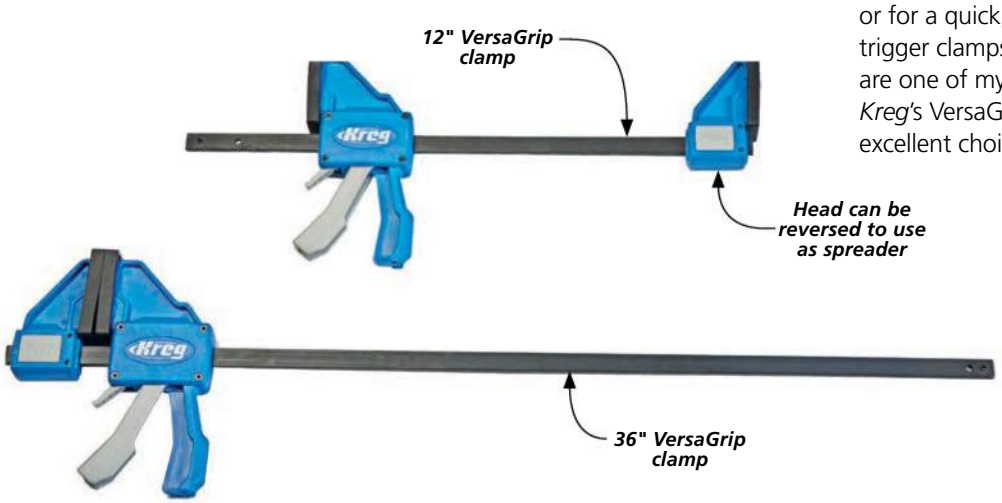

VersaGrip Clamps. Whether it's in the shop or for a quick, DIY project around the house, trigger clamps (or one-handed bar clamps) are one of my favorite tools to have around. *Kreg*'s VersaGrip clamps shown at left are an excellent choice if you find yourself in want of a set. They come in 6", 12", 24", and 36" lengths, and the reversible heads allow them to be used as clamps or spreaders as needed. Additionally, these are designed to work with a variety of *Kreg* jigs, including many of their pocket hole jigs.

sturdy Lumber Cart from ShopNotes

This versatile cart earns its place by providing handy storage and serving as a project staging center.

Lumber storage is one of those shop needs that always seems to be in short supply. Like clamps, you can never have enough of some things. And if you do happen to be lucky enough to have storage space for your wood and supplies, it's usually at the opposite end of the shop from where you're working. This little gem is the perfect solution when wrestling with that dilemma.

Between bins, shelves, and drawers, this cart has all manner of storage options. It also serves as a staging center for any project that you're working on. Stout and mobile, the cart is easy to move around your shop so it's right where you need it. I made my cart from maple and ¾" Baltic birch plywood. But don't hesitate to choose other options. You can build it with construction grade plywood and "two-by" material.

Written by: Phil Huber; Project Design: Chris Fitch

Exploded View Details

OVERALL DIMENSIONS:
26¾"D x 48"W x 64"H

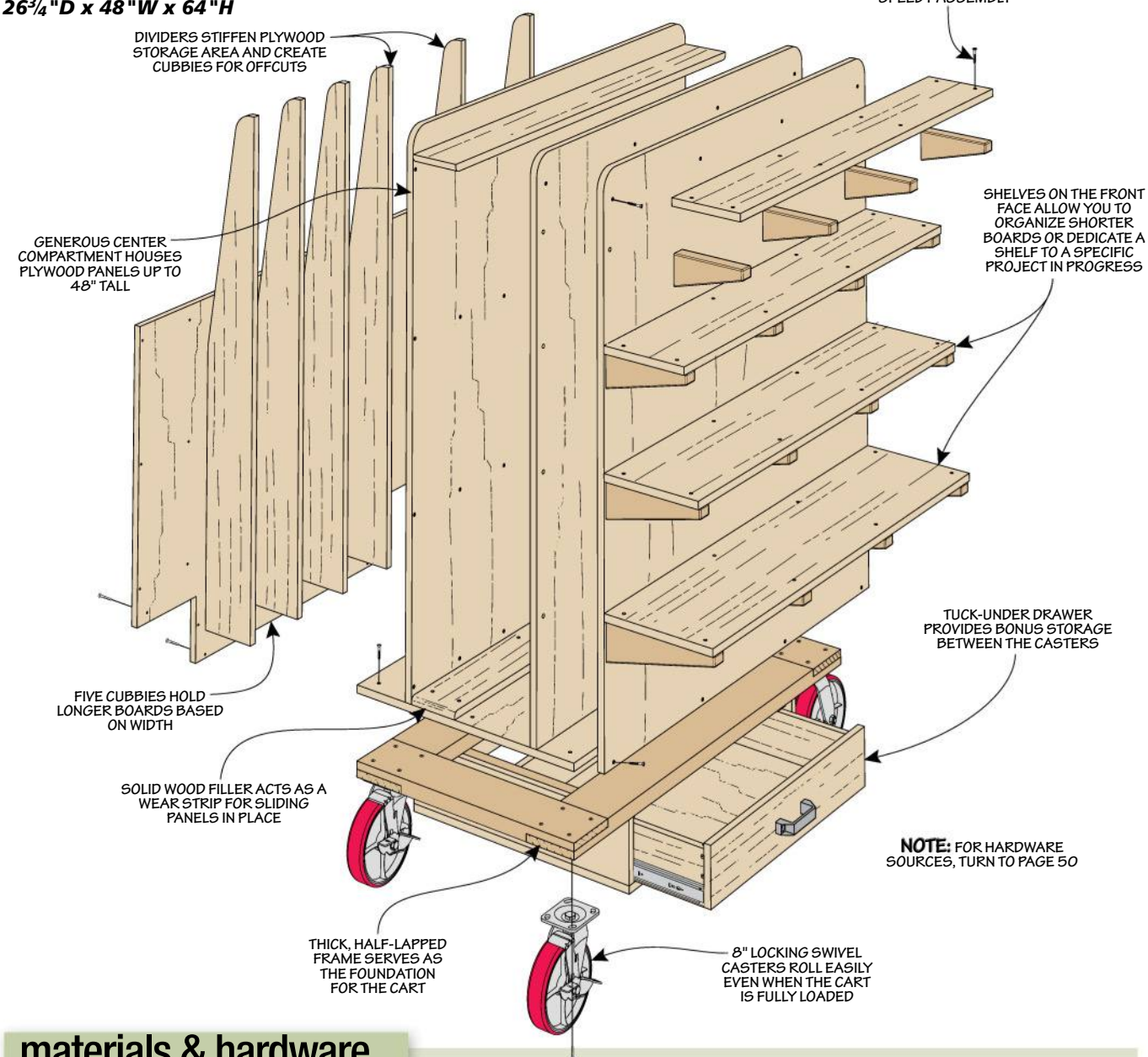

materials & hardware

A	Base Frame Ends (2)	1½ x 5½ - 26	M	Second Brackets (4)	1½ x 3½ - 10½	• (18) #8 x 1¼" Fh Woodscrews
B	Base Frame Sides (2)	1½ x 5½ - 48	N	Third Brackets (4)	1½ x 3¼ - 9	• (117) #8 x 1½" Fh Woodscrews
C	Base (1)	26 x 48 - ¾ ply.	O	Fourth Brackets (4)	1½ x 3 - 7½	• (4) #8 x 2" Fh Woodscrews
D	Drawer Box Sides (2)	6 x 26 - ¾ ply.	P	First Shelf (1)	12 x 48 - ¾ ply.	• (8) #8 x 2½" Fh Woodscrews
E	Drawer Box Cleats (2)	¾ x 1¼ - 25¼	Q	Second Shelf (1)	10½ x 48 - ¾ ply.	• (16) ⅜" x 5" Lag screws
F	Drawer Box Bottom (1)	26 x 30 - ¾ ply.	R	Third Shelf (1)	9 x 48 - ¾ ply.	• (16) ⅜" Washers
G	Back (1)	48 x 36¾ - ¾ ply.	S	Fourth Shelf (1)	7½ x 48 - ¾ ply.	• (1) 4" Drawer Pull
H	Dividers (6)	¾ x 6 - 51½	T	Drawer Sides (2)	5 x 24 - ¾ ply.	• (2) #8 x ¾" Ph Woodscrews
I	Spacers (2)	¾ x 5¼ - 48	U	Drawer Front/Back (2)	5 x 26½ - ¾ ply.	• (1 pr.) 22" Full-extension Drawer Slides
J	Divider Panel (1)	48 x 54 - ¾ ply.	V	False Front (1)	5¾ x 28¼ - ¾ ply.	• (4) 8" Locking Swivel Casters
K	Main Panel (2)	48 x 54 - 1½ ply.	W	Drawer Bottom (1)	26½ x 23 - ¼ ply.	• (16) ⅜" x 1¼" Lag Screws
L	First Brackets (4)	1½ x 3¾ - 12				

Illustrations: Harlan Clark, Peter Larson

A robust

Base Frame & Drawer Box

It stands to reason that a lumber cart requires stout construction if it's going to bear up under the weight of a bunch of boards and cut-up plywood sheets. So don't be too surprised by the amount of material it's going to take to build.

CONSTRUCTION OBJECTIVES. On furniture pieces, I like using interlocking joinery to create rigid structures. With a shop project, that often seems like overkill.

In order to get similar benefits, you'll notice that this cart makes use of a layered approach relying on woodscrews and glue to join parts together. Each new subassembly builds on, and reinforces, the previous one. The result is a cart that can take a heavy load.

BASE FRAME. Let's see how this plays out. The starting point for the cart is a solid-wood frame. It's shown in Figure 1. The four thick pieces are joined with half-laps. In spite of what I just said, taking the time to cut half-laps makes sense at this initial stage. First of all, this type of joint is easy to cut. Secondly, the large shoulders build in registration for a square assembly.

A dado blade in the table saw makes short work of these rather large half-laps (Figure 2). There are a few things to note here. You want to spend some time dialing in the height of the dado blade. The cut should be half the thickness of the parts — hence the name. Consistency is the other key. I used the rip fence as an end stop so that all the joints are cut to the same width. The distance from the fence to the outside edge of the blade should match the width of the frame pieces, as in Figure 2a. Since this isn't a through cut, it's ok using this setup.

ASSEMBLY. As you glue up these four pieces, check them for square. Tight shoulders are a good benchmark, but verifying with a square once the clamps are in place is a good idea, too.

While the glue dries, you can use the frame as a guide for sizing the base. Attach it to the frame with glue and screws, as in Figure 1.

DRAWER BOX DETAILS. The super-size casters this cart rolls on creates an inviting space between the wheels. Rather than let the space go to waste, I added a drawer. The drawer is housed in a

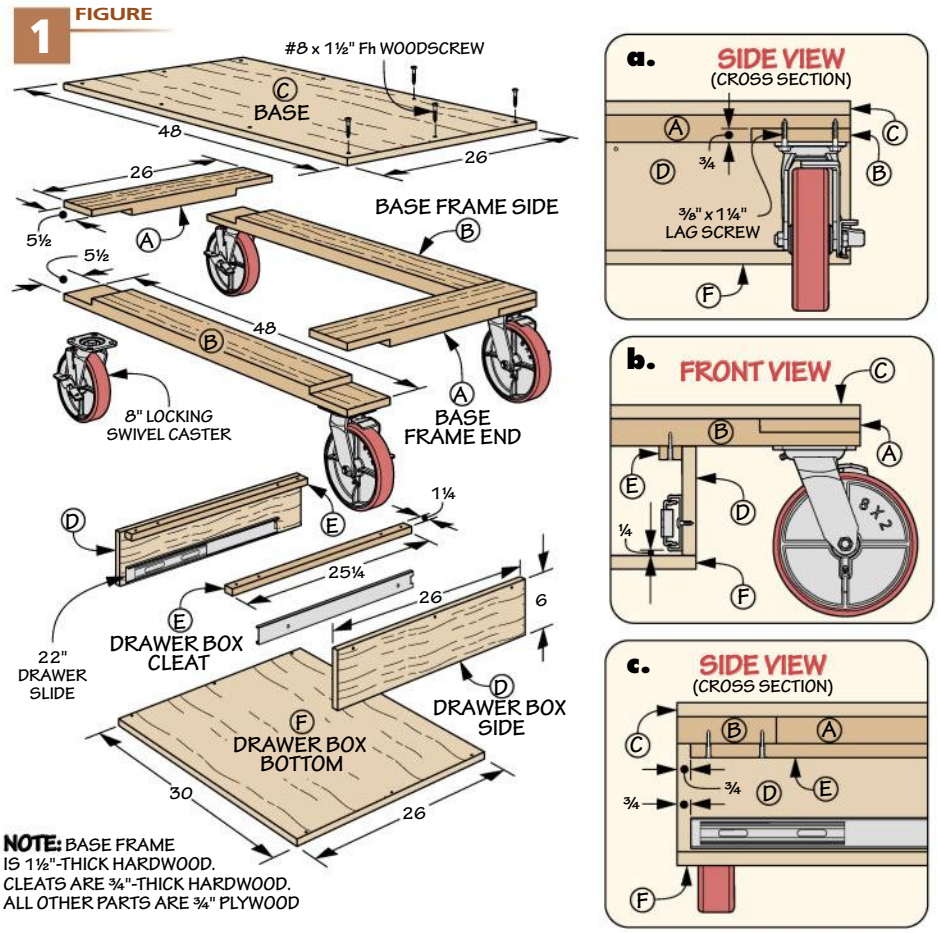

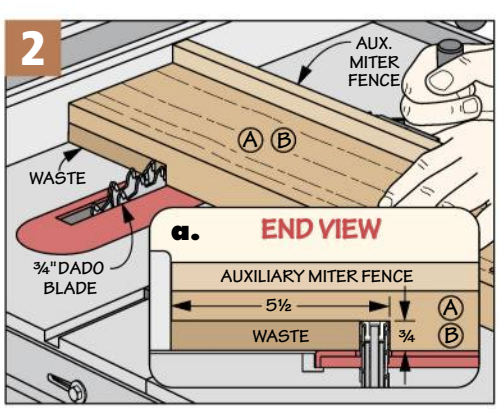

Base Frame Half Laps. Set the rip fence to create the shoulder of the half lap. Then nibble away the remaining waste material.

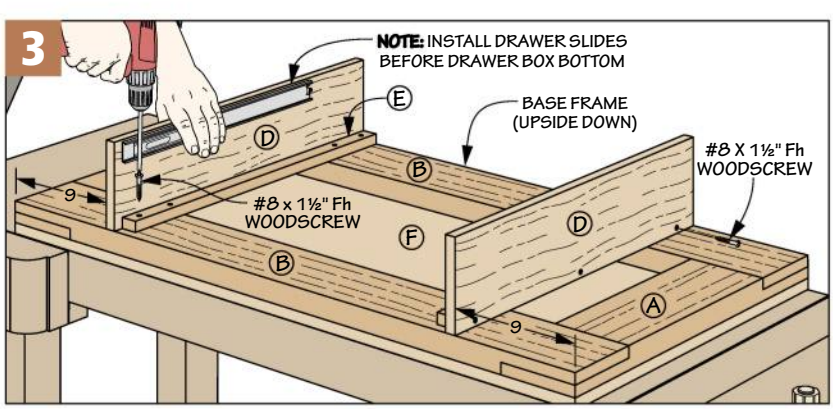

Drawer Box Cleats. After gluing the drawer box cleats flush to the back end of drawer box sides, you can attach them to the underside of the base frame with screws. The cleats serve as a stop for the drawer false front also.

simple enclosure consisting of two sides and a bottom (Figure 1). This hangs centered on the underside of the base frame. A back for the drawer box is incorporated into another piece that's made later on.

The easiest way to build this box is to lay the base frame upside down on your workbench, as illustrated in Figure 3. Start by gluing and screwing the cleats to the drawer box sides. Then, fasten the cleats to the base frame with screws. What's important here is that the box sides are parallel to each other.

Since the next few steps will close off the drawer box, I decided to install the drawer slides now rather than forcing myself to work in a confined area later. The trick here is to install the slides ¼" up from the bottom of the drawer box, as in Figure 1b.

Later, when the drawer is added, the slides will be installed flush with the bottom of the drawer sides. This will give the clearance needed for the drawer so it doesn't bind. Notice in Figures 1 and 1c that the setback of the slides and cleat matches the thickness for the drawer front

Normally, I save this next step until later in the construction. However, while the cart is still light and manageable, I added the casters by screwing them to the base frame (Figure 1b). With that done, you can take the cart off the workbench and move on to the storage structure that's above the base.

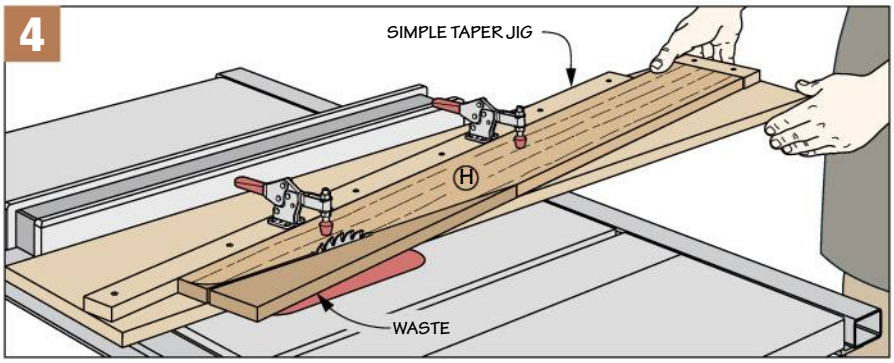

Tapered Dividers. The tapers on the dividers are best cut at the table saw. To keep the dividers uniform, use a taper jig. The jig holds the dividers firmly at the proper angle as you pass them over the blade.

PANEL POWER

The upper portion of the cart starts with a large back panel and set of solid-wood dividers, as shown in Figure 5 below. The back runs the length of the cart and features two large notches to provide clearance for the casters. The resulting tab at the bottom also encloses the back of the drawer box.

Six long dividers are attached to the back of the cart to create five compartments. Figure 4 above provides the details for fashioning the tapers. The upper corners of the dividers are rounded to ease a sharp edge.

After cutting and notching the back, I marked and drilled all the screw holes (these are shown in Figure 5), and attached the back to the cart. This made it easy to install the dividers. To get the ball rolling, I clamped a scrap across the base to trap the dividers against the back. Then it was just a matter of spacing and screwing the dividers in place, as you can see in Figure 5c.

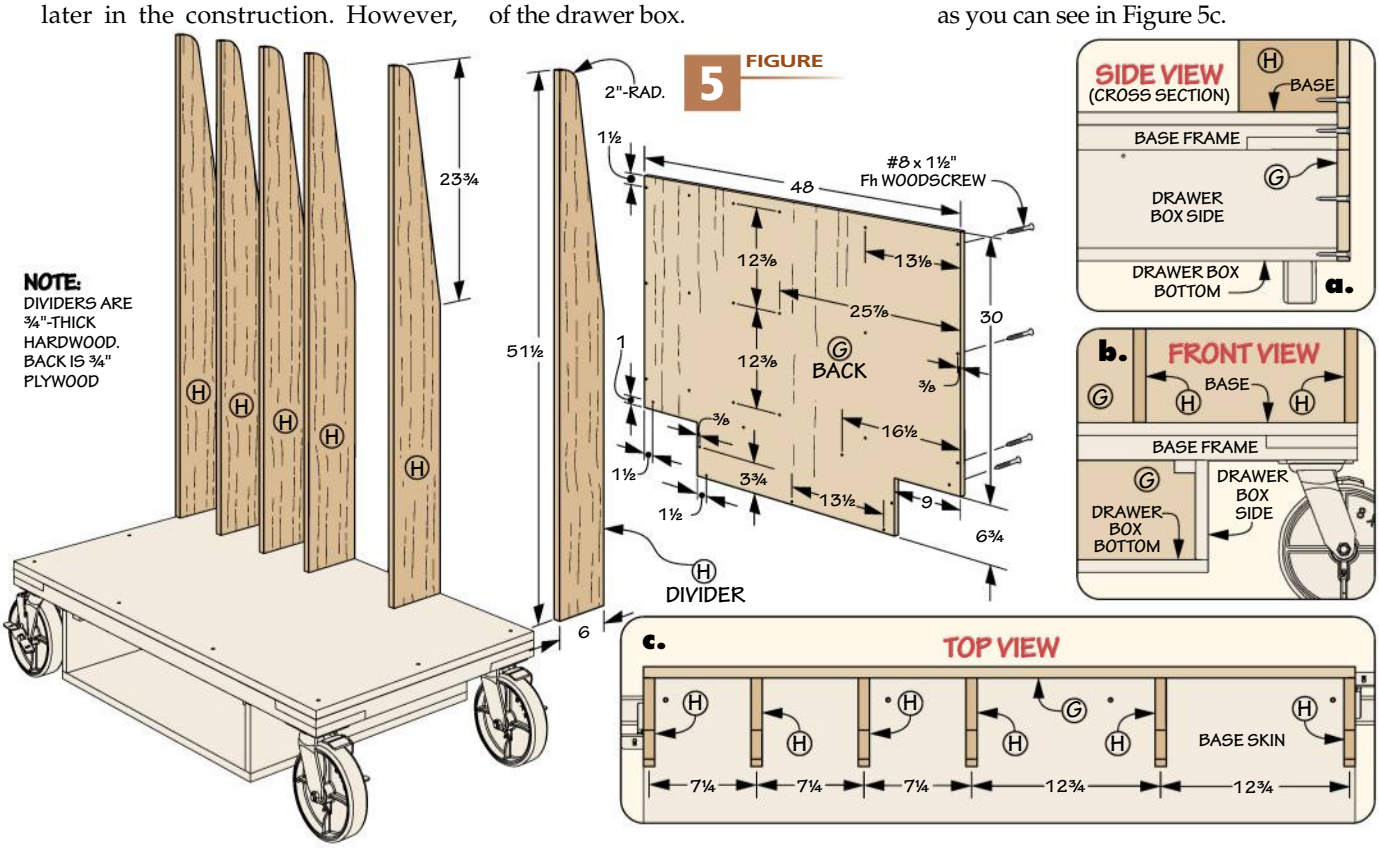

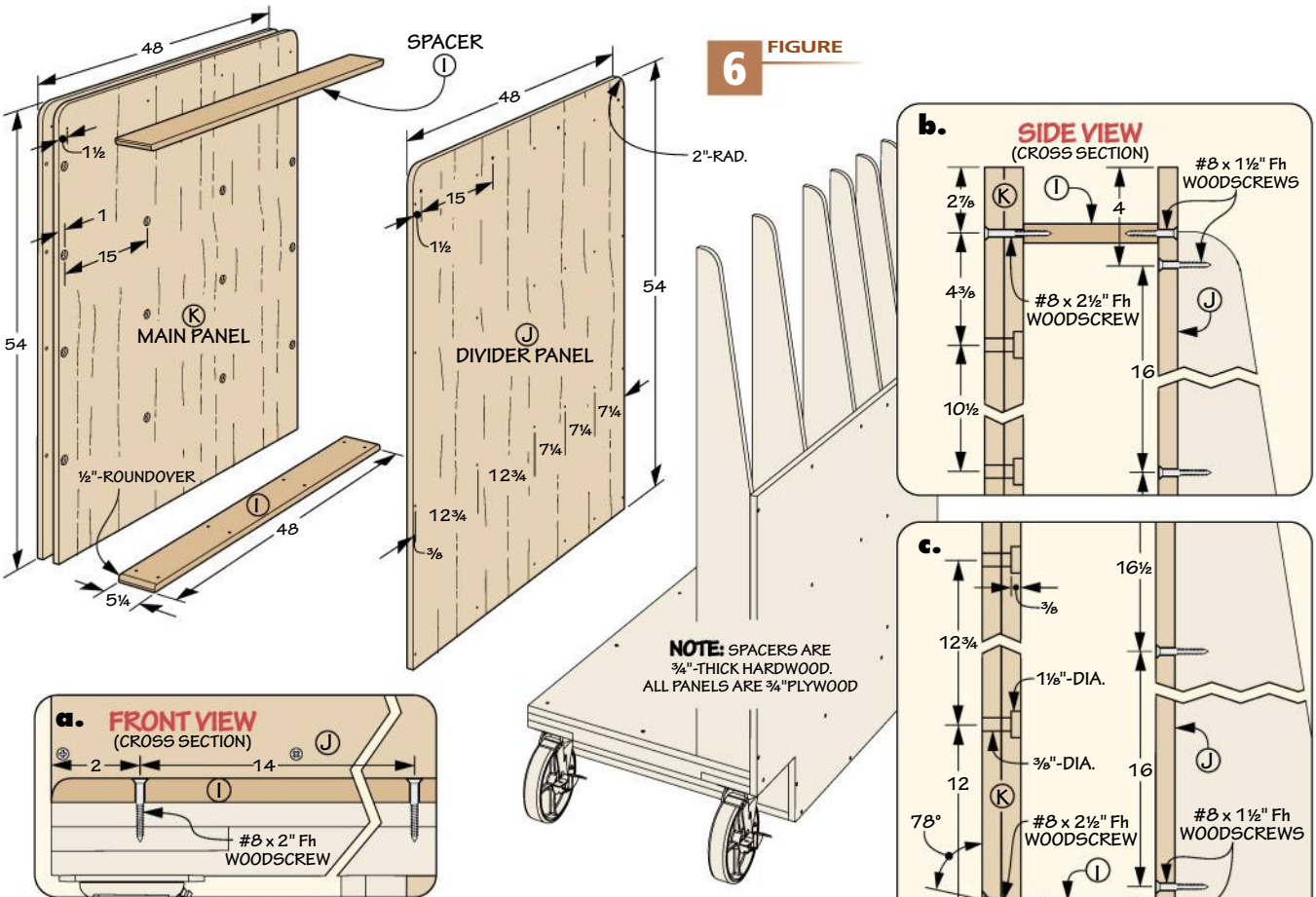

now a plywood

Storage Compartment

Three plywood panels form the backbone of this project, as you can see in Figure 6. The rear-most panel attaches to the dividers. The other two panels are sandwiched together and become the main panel. They're doing the double duty of forming the front wall of the storage cavity and the support for the four shelves at the front of the cart. Between the panels are two hardwood spacers. They form a large sheet goods storage cavity in the center of the cart. They both have generous roundovers on the ends to funnel material into the cavity — more on those in a bit.

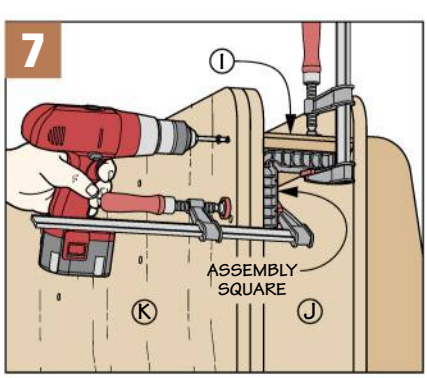

Square Up. Use an assembly square to hold the spacer square to the main panel while fastening.

PANEL DETAILS. All three panels are identical in size and have the same finished radius on the top corners. Focusing first on the divider panel, lay out and drill the pilot holes and countersinks that are needed. Note that you need to drill pilot holes and countersinks from both faces (Figures 6b and 6c).

The main panel has fasteners and lag screws running through it, so the easiest way to keep it all orderly is to glue and screw them together. Then, from the back face, drill the counterbored holes for attaching the shelves.

ASSEMBLY TIME. The divider panel is glued and screwed to the upright dividers. The upper spacer attaches through the back of the divider panel, as in Figure 6b. The lower spacer is screwed directly to the cart base (Figure 6a). Then you can attach the main panel, as in Figure 7.

BRACKETS & SHELVES

The front of the cart features four shelves that rest on thick brackets, as you can see in Figure 8. The shelves and brackets graduate in width and length from top to bottom.

MOUNTING THE BRACKETS. You can shape the brackets with a taper jig at the table saw similar to making the dividers. The mounting guide shown in Figure 9 helps to position the brackets and mark the locations for the pilot holes in the back of each bracket. For ease of installation, I mounted the brackets from the bottom up. I also put a little beeswax on the threads of the lag screws to smooth the installation process.

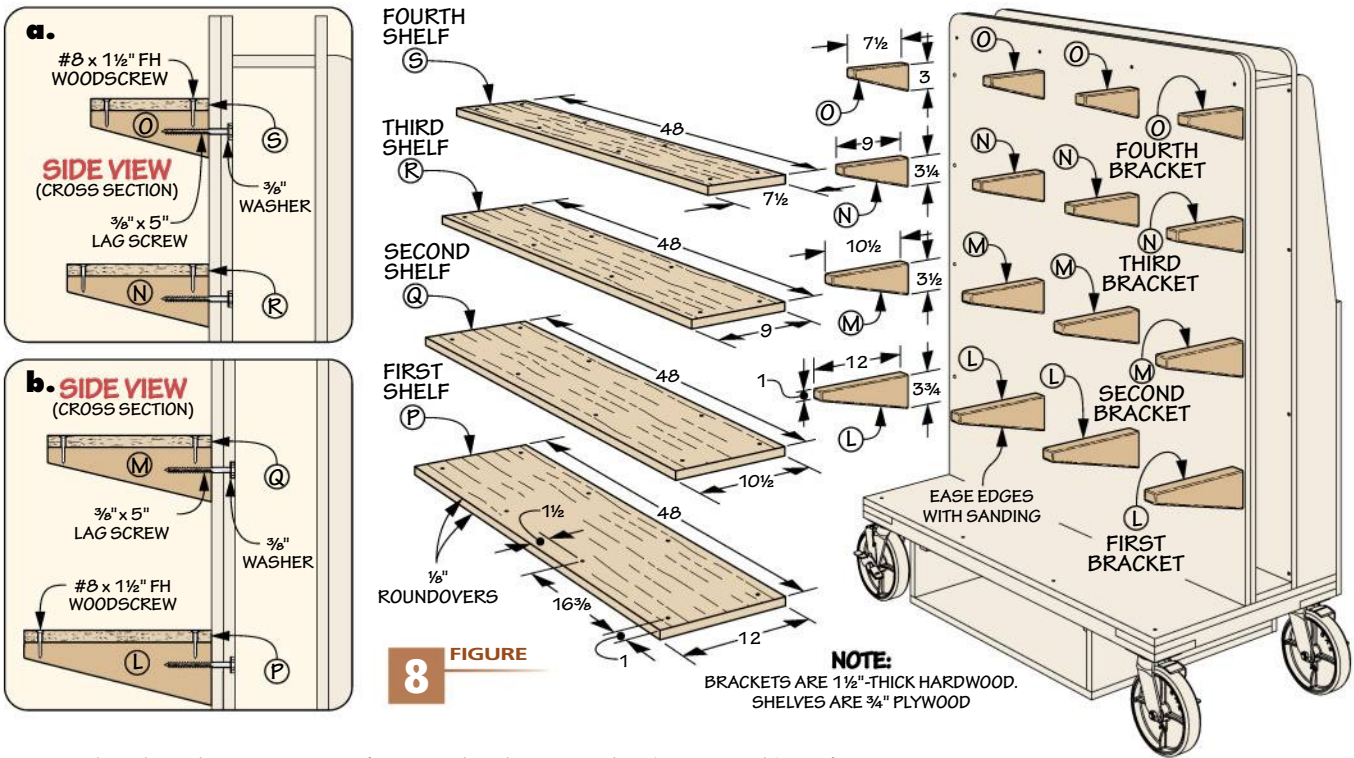

FIGURE 8

Sixteen brackets later, you can focus on the shelves.

SHELVES. You'll see that the shelves are the same width as the brackets they sit on. Once I cut them to size and rounded over the edges, I drilled the pilot holes and countersinks. As with the brackets, I installed the shelves from the bottom up.

DRAWER DYNAMICS

The generously sized drawer is made from Baltic birch plywood. It's constructed with a simple rabbet in the drawer sides (Figure 10b). Before screwing the drawer together, cut the grooves for the drawer bottom in all four pieces, as in Figures 10a and 10c.

I attached the false front with screws from the inside, as in Figure 10a. The drawer slides fit against the false front and flush with the bottom edge.

I applied lacquer to the whole unit. That was an easy choice. Choosing what wood to save and which scraps and offcuts to send to the fire pit is a dilemma that's ongoing.

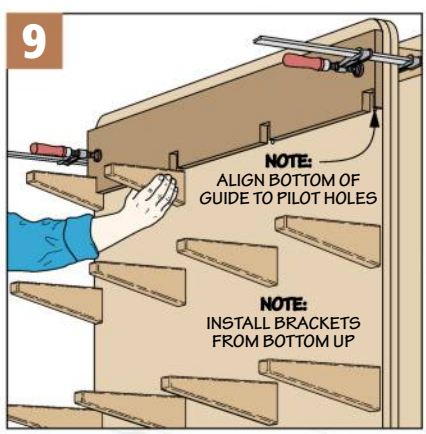

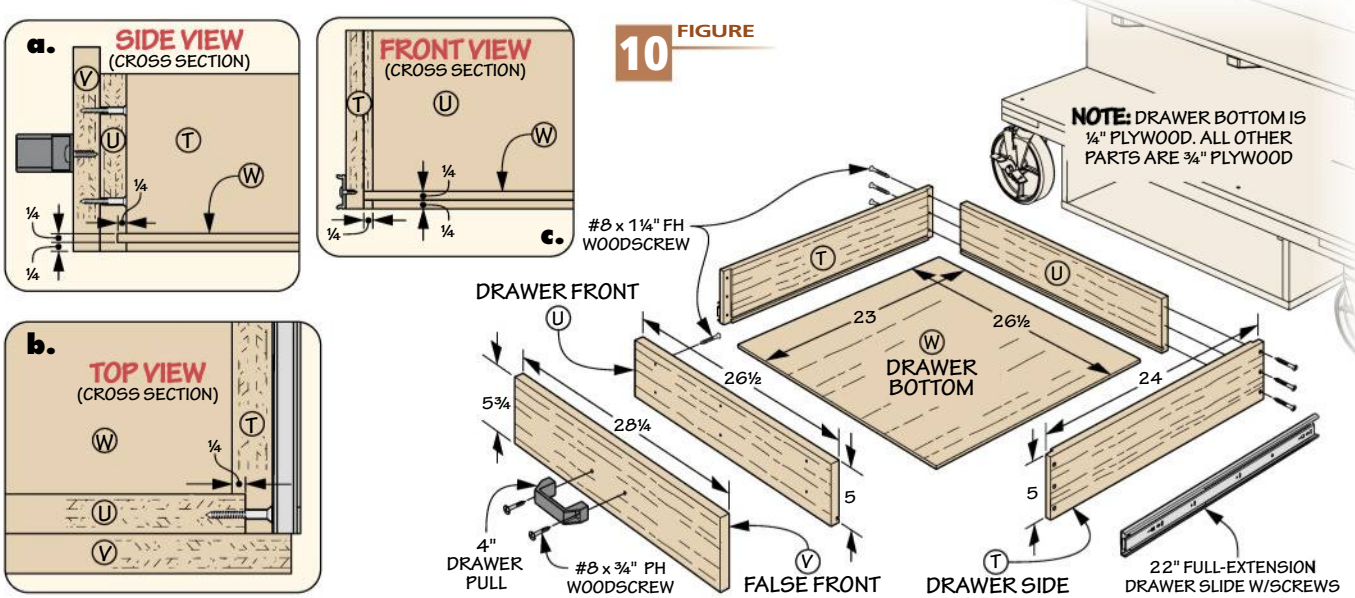

FIGURE 10

THE COMPLETE WOODWORKING SOLUTION.
ONE BRAND, EVERY JOB
INCREDIBLY STRONG
GORILLA
100% TOUGH
WOOD GLUE
ULTIMATE
100% Waterproof
No Foaming
DRIES NATURAL COLOR
FOR THE TOUGHEST

JOBS ON PLANET EARTH®

GORILLATOUGH.COM

Usonian Music Stand

With an emphasis on geometry and verticality, alongside a body of oak accented by mahogany, this music stand is worthy of the virtuoso in your life.

For the orchestrally inclined, a music stand is a ubiquitous piece of furniture. Unfortunately, most are rather cheap, made of aluminum and low-quality steel with a simple coat of black paint. In this project, our designer, Dillon Baker, shot higher, aiming to create a long-lasting stand that was as appealing visually as the music would be aurally.

The stand leans heavily into the nearly century-old Usonian style, created by Frank Lloyd Wright. Geometry and grain pattern are the key aesthetics here. The grain of the oak plywood draws the eye up, toward the book panel. A few rounded, mahogany pieces provide a pleasant accent, contrasting the sharper angles of the hexagons. Tilts and tapers bring the piece to life, adding a dynamic element to the more static parts.

In terms of construction, this stand offers some distinctive choices. The integration of hexagons and various angles presents a unique challenge in the shop. The two mechanisms, the pivot and the height adjustment, are crafted from a clever combination of shop-made wood parts and simple, common hardware. All in all, this stand provides an intriguing build and a beautiful product.

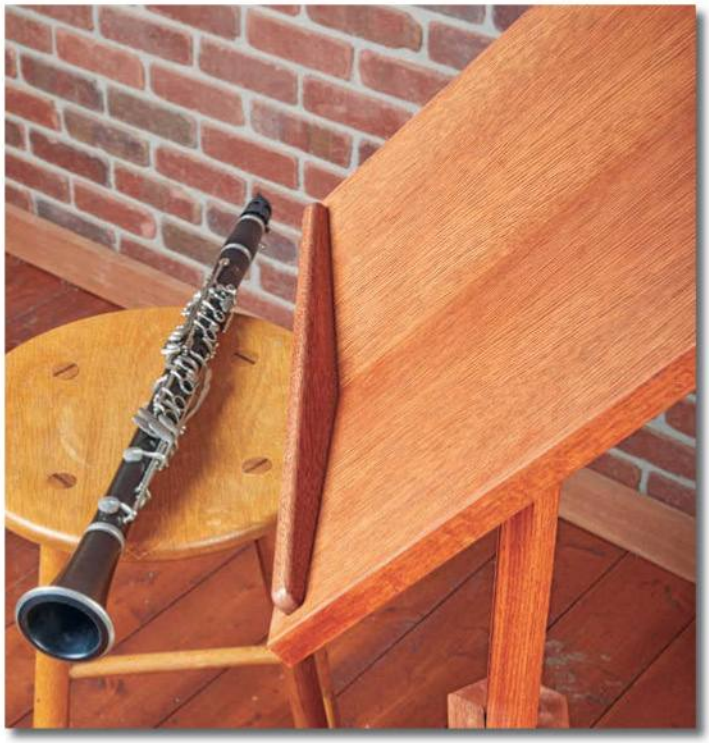

▲ Tilted and tapered book leaves, along with a rounded lower lip, hold the sheet music. The pivoting assembly beneath the book panel allows it to be adjusted to the musician's preference.

▲ The tensioning mechanism for the central post relies on six simple pieces of hardware. The post allows the stand to be adjusted by up to a foot; and by tightening the knob, the post is pinned in place.

Written by: Rob Petrie ; Project Design:Dillon Baker

Illustrations: Harlan Clark

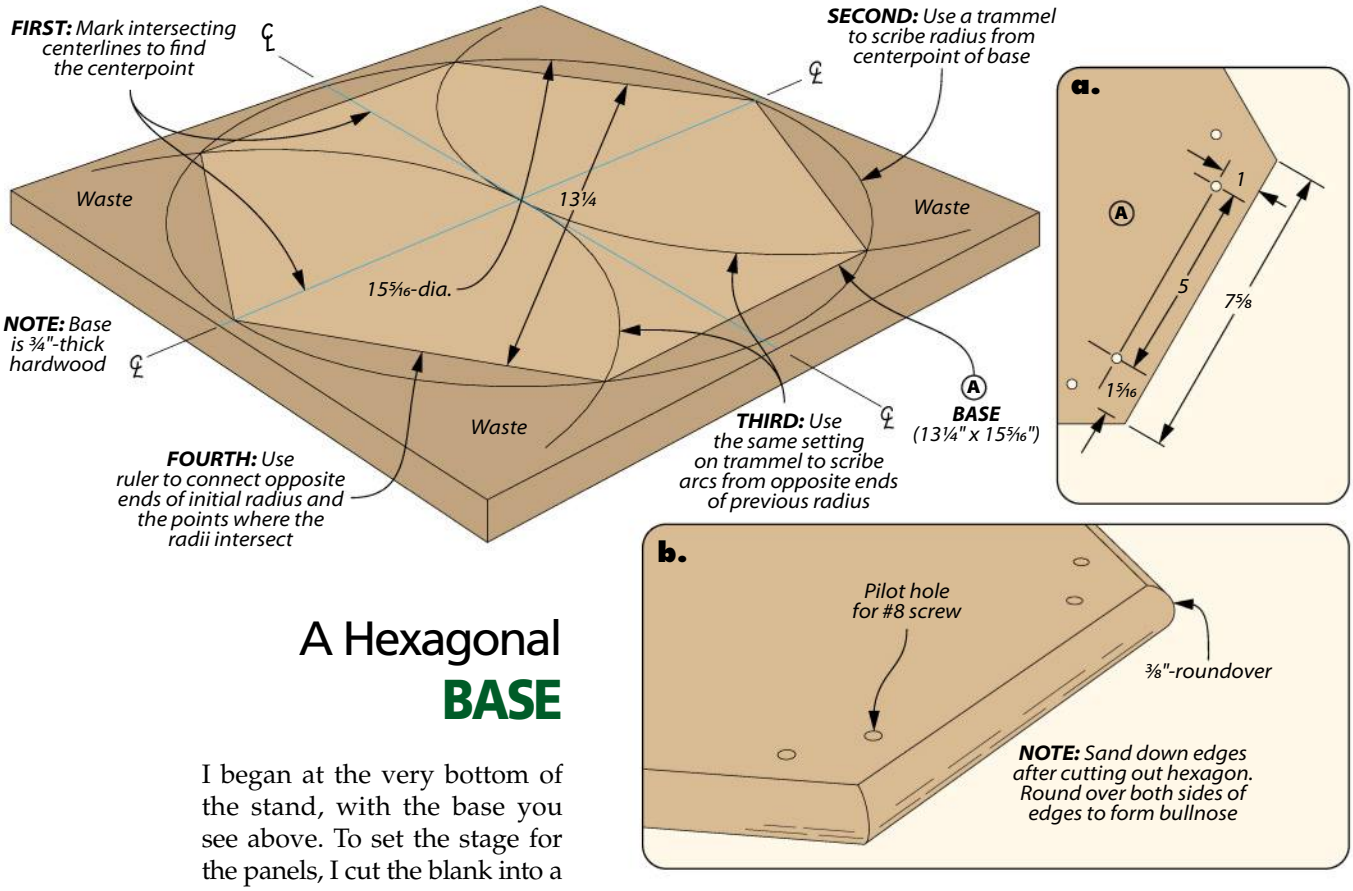

A Hexagonal **BASE**

I began at the very bottom of the stand, with the base you see above. To set the stage for the panels, I cut the blank into a hexagon with bullnosed edges.

MAKING A HEXAGON. The blank started out as a length of 4/4 mahogany. The plywood parts are all oak veneered, and the mahogany is an accent motif across the project. I cut an oversized blank first (about 16" x 16"), then laid out the hexagon.

Laying out a perfect hexagon is actually quite easy. Begin by marking centerlines across the blank to find the centerpoint. From there set a trammel to the radius of the hexagon ($7^{21}/_{32}$") and scribe the radius from the centerpoint.

Next, select one of the centerlines. At both points where the centerline intersects with the previous radius, scribe an arc using the same setting on the trammel. Now you have the six points you need to connect: the four where the arcs intersect the initial radius, and the two ends of your chosen centerline.

SHAPE THE BASE. You can see how I went about shaping the base in the box at left. I began at the band saw, trimming off a majority of the waste, then I took the workpiece to the edge sander. From there, I rounded over both sides of each edge to form a bullnose (as in detail 'a' at left).

SHAPING THE BASE

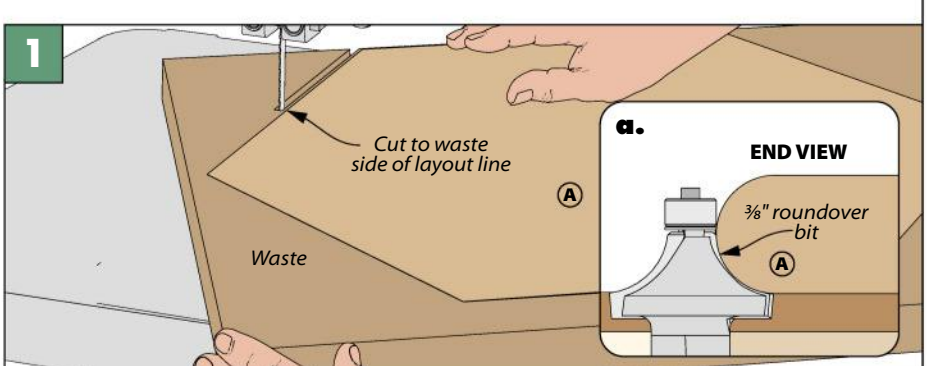

Three-Part Shaping. After laying out the shape, I roughed the base to it at the band saw. Next, I sanded down the edges, then rounded them over to a bullnose.

PANEL ASSEMBLY

Atop the base is a hexagonal pyramid of plywood. For the panels that make up each side, I used MDF-core plywood (it's even more stable than the standard variety) with an oak veneer.

Within this pyramid are three filler pieces, which will act as guides for the center post.

BASE PANELS. I started with the panels, cutting the initial blanks slightly oversized. Figure 1 in the lower right box shows the next step: beveling the ends to achieve the tilt later on.

For the tapers along the sides, I used a template. This matches the overall dimensions of the panels, but with a 6° taper along each side. Once the template was made, I stuck it down to my first panel with double-sided tape and started shaping.

I rough-cut most of the waste free at the band saw. However, rather than flush-trim it to the template, I used a 30° chamfer bit. The bevel this creates allows the six panels to fit flush together.

BASE FILLERS. For the base fillers, I used MDF. Once cut to size, they'll need an 11° taper to match the tilt of the panels. While cutting these, collect some extra material and make six additional pieces of this size and shape. As Figure 4 shows, these will act as clamping cauls.

BISCUIT JOINERY. Angles always make glueups tricky, but there's an easy solution here; biscuits. Any sort of loose tenon is a great option to keep things aligned during assembly, but a biscuit joiner is particularly easy to use on beveled edges like these.

Figure 4 shows my glueup. The cauls I mentioned keep the band clamps from slipping up as pressure is applied. A bit of double-sided tape along the tapered edge of the cauls will help keep them from collapsing in. Once the clamps are removed, I glued the fillers into the interior. Again, the cauls will be useful for clamping. After those dry, the final step is to screw the panel assembly to the base. Details 'a' and 'b' at the top of the previous page show how I spaced the pilot holes for the screws.

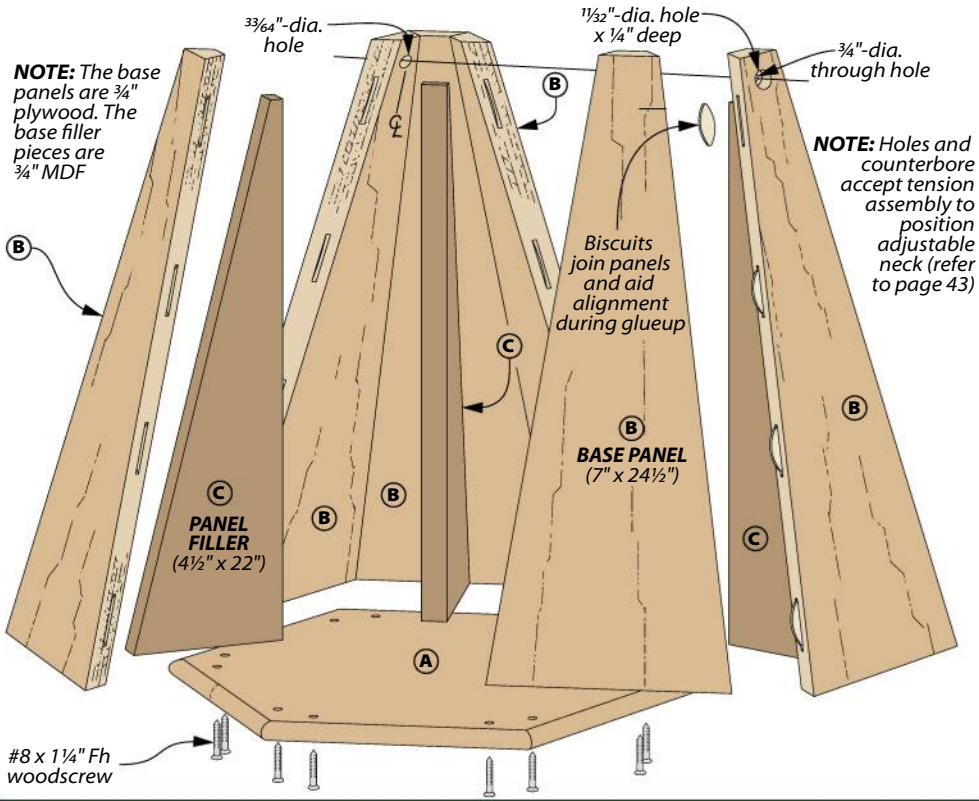

MAKING BASE PANELS

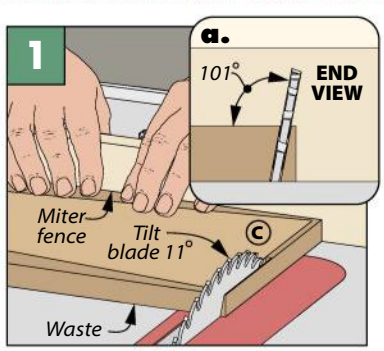

Beveled Ends. First, bevel the top and bottom of the panels.

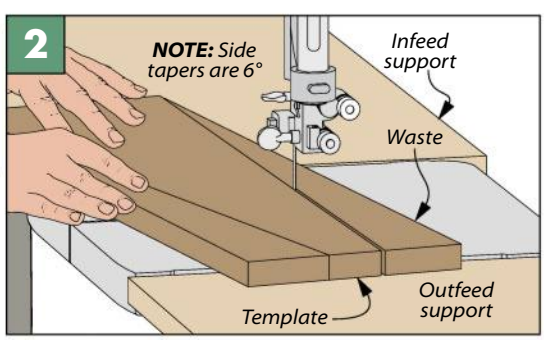

Taper Template. Creating a template for the base panels will ensure equal tapers on each.

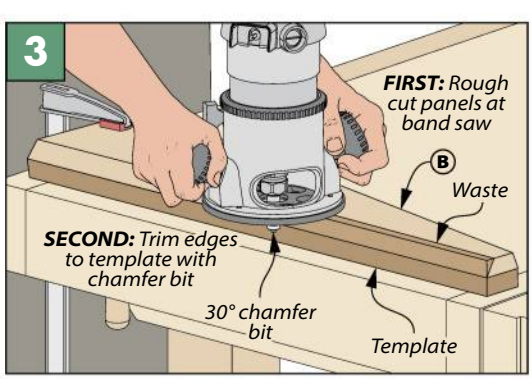

Flush Chamfer. After roughing them out, I trimmed the panels' edges with a chamfer bit.

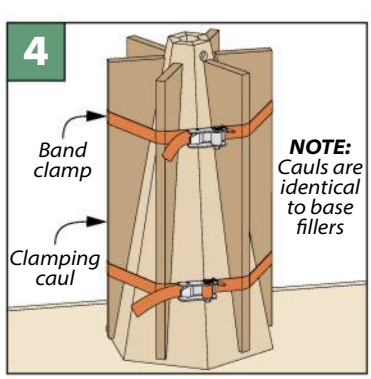

Glueup. Use band clamps and cauls to glue the panel assembly.

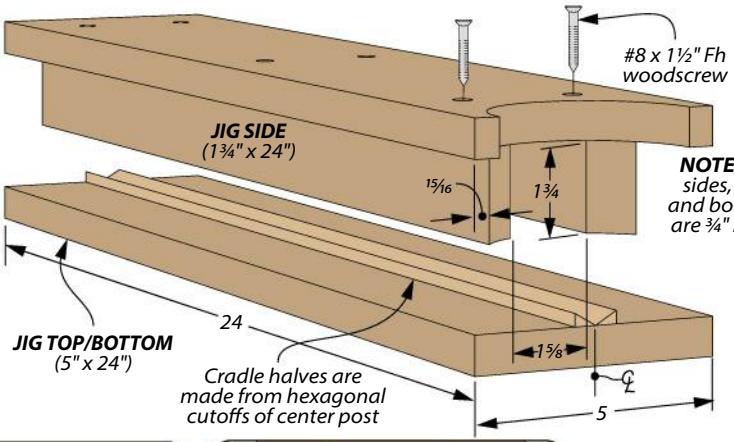

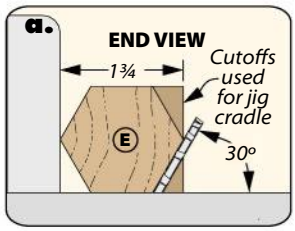

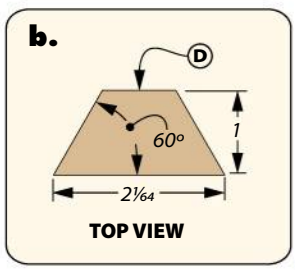

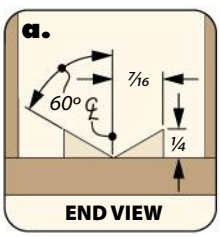

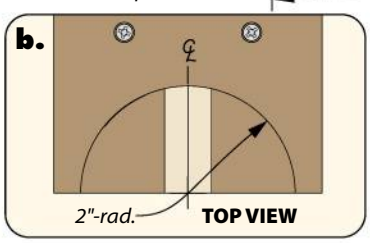

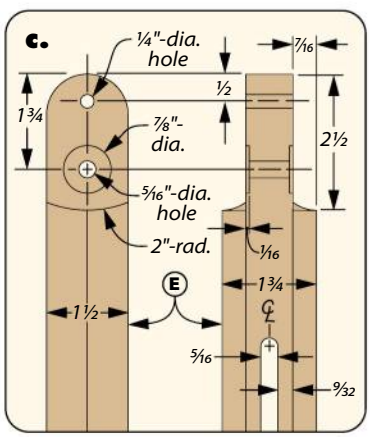

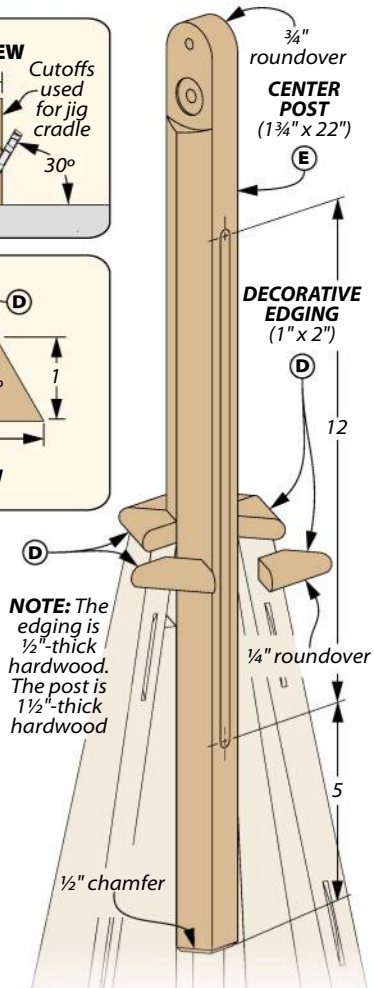

Standing Up a CENTER POST

With the base constructed, the next parts to look toward are a series of pieces that allow the proper height and angle for this stand to be adjusted. However, first will come a set of easy-to-make, decorative pieces.

DECORATIVE EDGING. Six small trapezoids ring the top of the base. In keeping with the motif, these were made from mahogany. Aside from sizing, they need 30° miters to both ends (detail 'b'). Once they're cut, glue them together into a hexagonal ring. A quick-set glue and a bit of tape to hold them is sufficient. Once dry, round over their edges to form a bullnose. Finally, glue the edging to the top of the base panel assembly.

CENTER POST. The center post fits inside the base, sliding up and down to adjust stand's height. The top features an adjustable neck as well, accepting the pivot mounts that come next.

This part matches the base panels; that is, it's made of white oak. To kick things off, tilt your table saw blade to 30° and cut the blank into a hexagon (detail 'a'). This allows it to fit in the base.

A slot through the center of the post will accept one of the two tensioning mechanisms, allowing for vertical adjustment. Drill out either end at the drill press, then rout between the holes using a straight bit to finish it.

ADJUSTABLE NECK JIG. To finish the remaining work, we'll need a jig. The jig shown above holds

ADJUSTABLE NECK

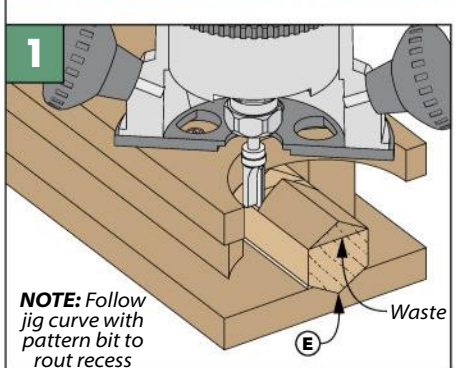

Jig Routing. To clear space for the pivot mounts, follow the curve of the jig with a pattern bit, routing out the shoulder.

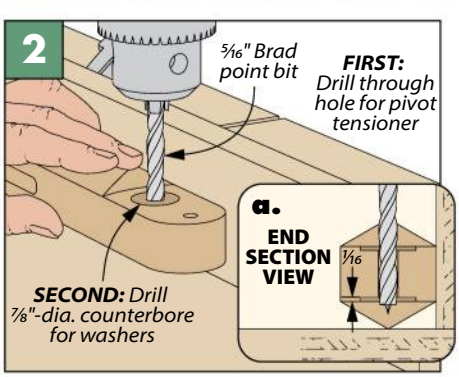

Pivot Holes. Drill out one hole for the pivot pin and another counterbored hole for the tensioning mechanism.

the post within, using a cradle to support a corner. As in Figure 1, the radiused cheeks are the first things to work on. This is done with a pattern bit, establishing the shoulders, then routing off the remaining waste. That's followed by drilling a hole for the pivot pin, as well as a counterbored hole for the tensioner to secure the pivot.

Last on this post, we'll need to deal with the ends. The chamfered bottom can be made with six passes over a chamfer bit in your router table. The rounded top is marked out with a compass, then cut at the band saw and finished at the edge sander. That completes the post; set it aside for now. We'll get back to it soon enough.

PIVOT MOUNTS

Next are the pivot mounts made from mahogany. After sizing the blanks, head to the drill press to bore out the holes shown in detail 'a' while the blank's still a rectangle. Flip the pieces onto their faces as well and cut three holes in each: one for the pivot pin, and two to establish the ends of the curved slot (detail 'b'). Finally, cut a bevel on each mount's bottom (detail 'a').

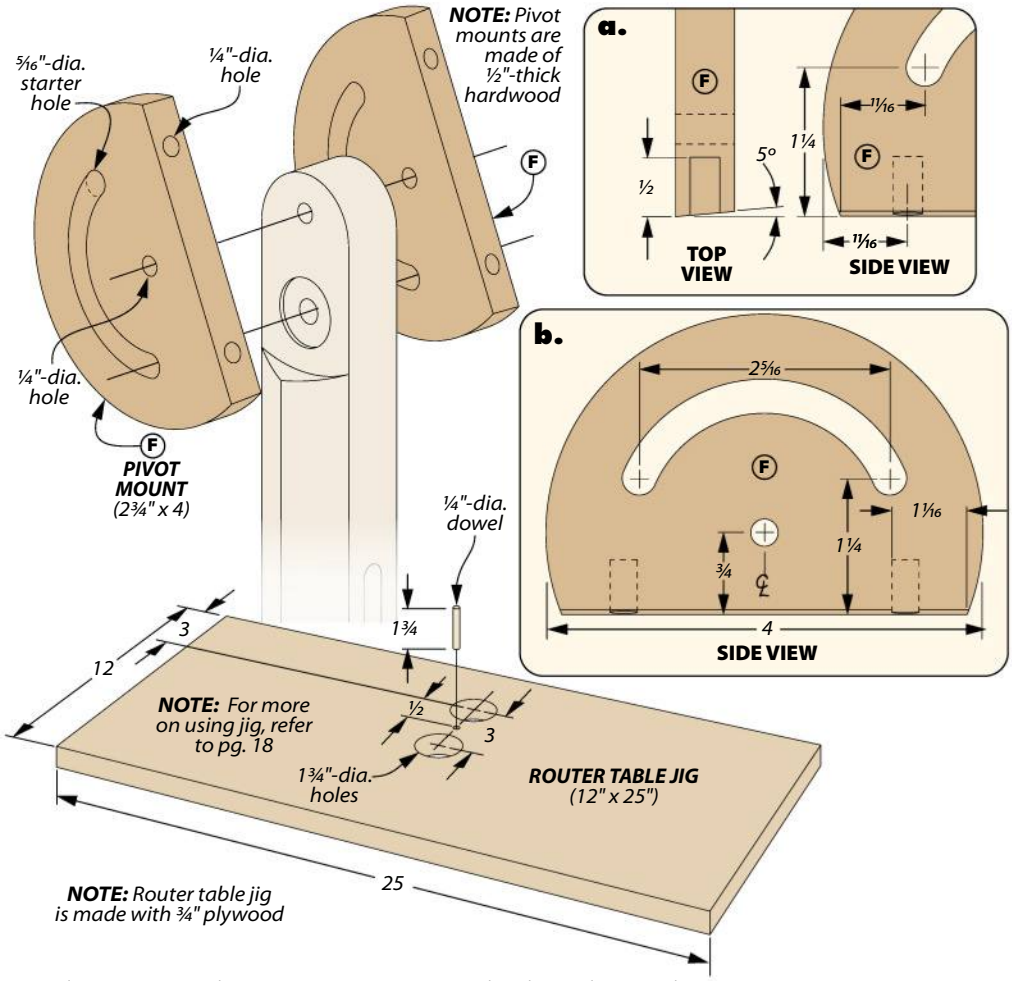

The next steps here are to rout a couple radii. This is done using the jig you see above. Figures 1 and 2 below show the technique, but Dillon offers a more in-depth look on page 18.

With that done, the pivot mounts are complete. Like the center post, these can be set aside for now — we'll attach them later, when the hardware is brought in.

ROUTING ROUND SHAPES

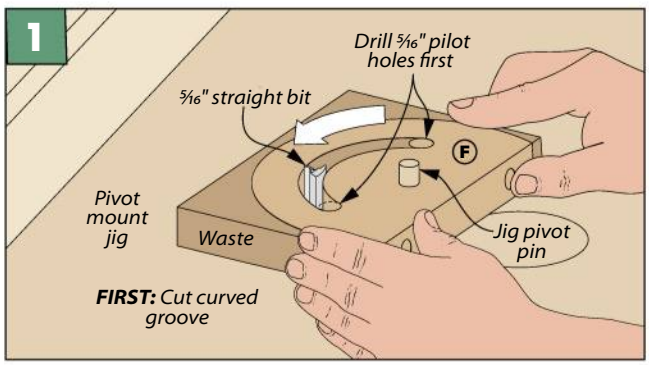

Curved Slot. Use a straight bit along with the router table jig to cut away the remaining waste in the curved slot. Remember to rout counterclockwise to avoid backrouting.

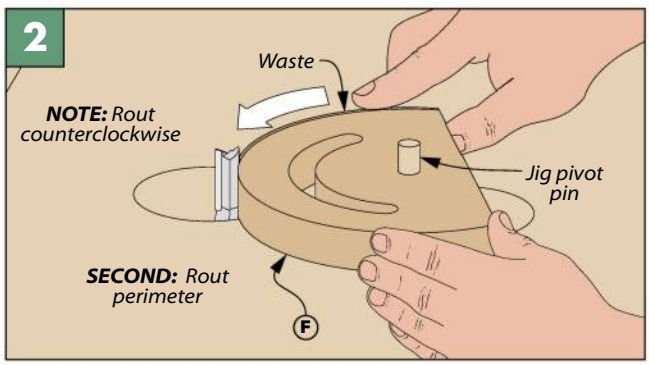

Curved Perimeter. Reposition the jig to cut the exterior of the pivot mounts. For a clean cut, remove the waste here in several passes, raising the bit between each pass.

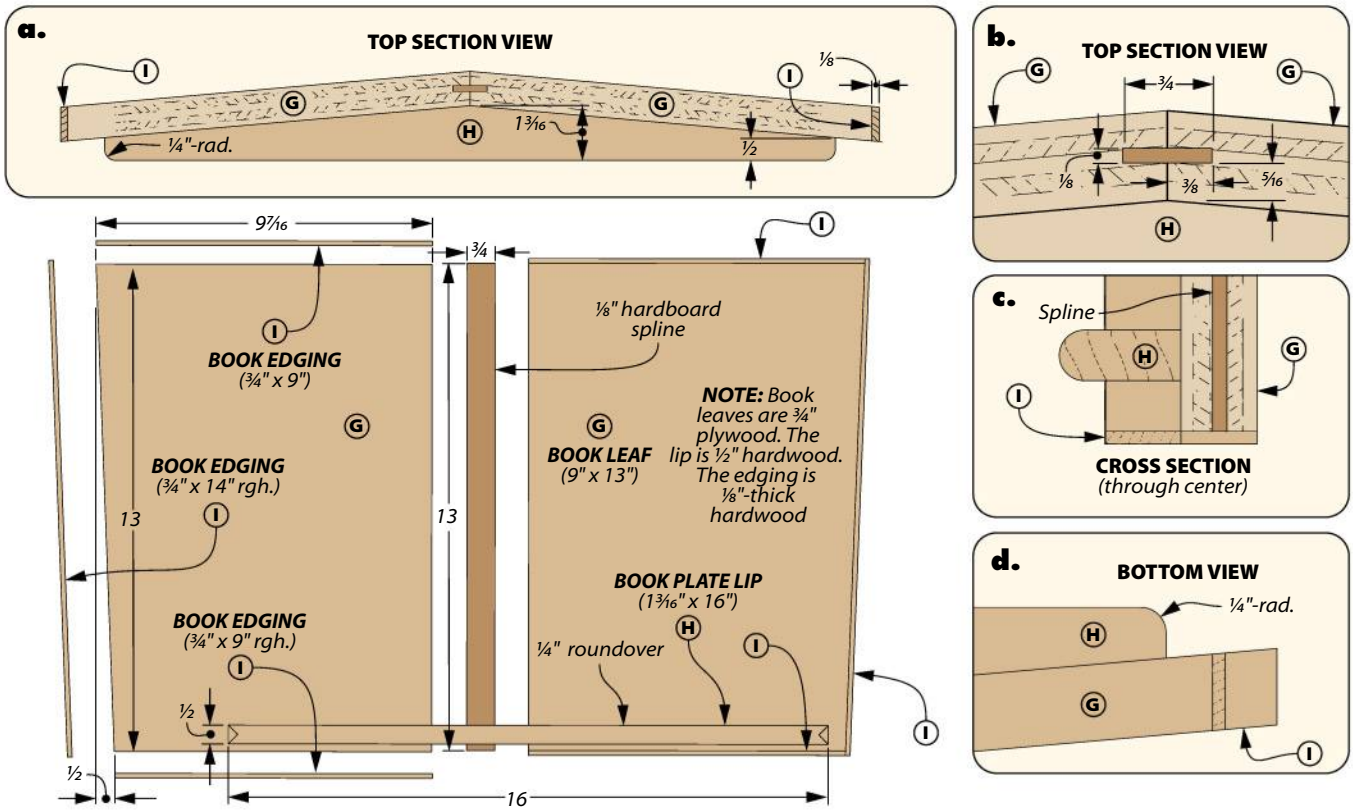

Top It Off With a **BOOK PANEL**

At this juncture, only one more assembly needs to be made. The book panel consists of two leaves, a lip to support the sheet music, and edging to wrap around, disguising the plywood.

BOOK LEAVES. The book leaves are pretty simple. They're two pieces of plywood joined by a spline. A 5° bevel on the grooved edges causes the leaves to tilt toward each other.

I took care of the grooves and bevels at the table saw, as in the lower left box. A slight taper was then cut along the outer edges at the band saw and finished at the edge sander.

BOOK LIP. The book lip is another mahogany accent. When sizing it, cut a second one, as it'll aid in the glueup. Once sized, lay out the angles on their back sides (detail 'a') then cut them.

With the lip and its copy made, cut the spline and glue up the book panel. Detail 'b' above shows what these look like. Clamps on the outer edges and along the book lips will provide ample pressure without slipping. Apply tape to the back side of the lips beforehand to keep the glue from attaching them, too.

FINISH THE LIP. Once the clamps come off, you can toss the second lip and finish the first one. As in details 'a' and 'd,' the front corners of the lip are radiused. Once this is done, rout a roundover across the front edges of the lip, then glue it to the book panel assembly.

BOOK EDGING. To match the face veneers, I used white oak for the book edging. These can

SPLINED BOOK PANEL

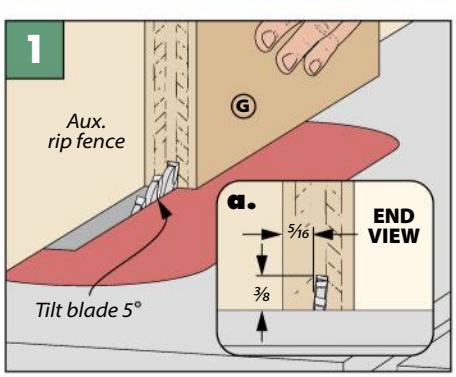

Book Spline. After cutting the two book leaves to size, I tilted my table saw blade to cut grooves for the spline.

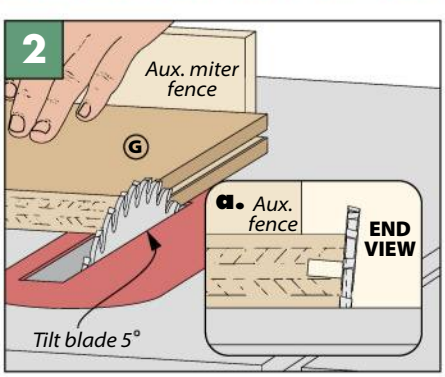

Beveled Interior. The book leaves tilt up at their sides, which is accomplished by beveling their interior edges.

simply be cut to size and glued in place, but you'll want to keep a block plane nearby. As you can likely intuit from the art on the previous page, several of the edging pieces won't terminate at exactly 90°. However, since the edging is so thin and the variance is only 5° at max, a block plane was the easiest solution to any discrepancies.

PUTTING IT TOGETHER

Now to assemble all the parts you've made so far. There are two areas to look at here: the pivot and the post, and we'll begin with the pivot.

PIVOT. Start by attaching the pivot mounts to the neck of the center post, as is shown in detail 'b.' The pivot pin connects the three parts first, followed by the cushioning washers and the studded brass knob, which threads into the through knob. Next, attach the book panel to the pivot using dowels, as shown at right.

POST. Detail 'c' shows the post assembly. I drilled the holes here using a hand drill and an angled guide block. After drilling, I tapped the threaded insert, inserted the brass tubing, then slipped a cushioning washer into the counterbore.

Now for the tricky part. Feed the studded brass knob through the front hole, including the cushioning washer and brass tubing, allowing it to stick out just slightly within the center column. With it there, slip the angled nylon spacer over it, then another cushioning washer.

Slide the post down the center column with the slot aligned to the knob's stud. Once the stud can pass through the slot, push it through and thread it into the insert. As you tighten the knob, the inner cushioning washer will apply tension to the post and lock it in place. With a bit of finish, the stand is now complete. W

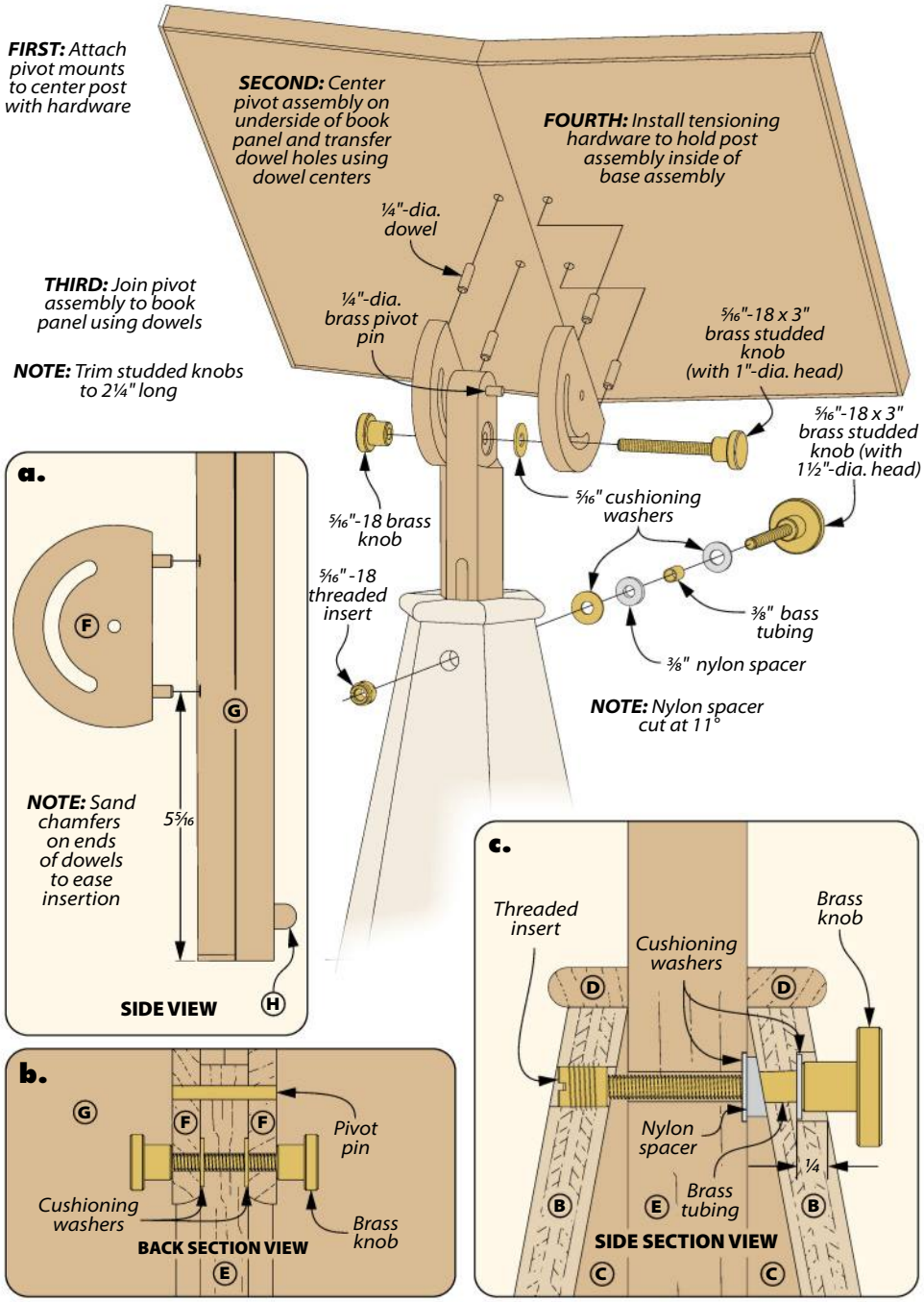

Materials & Supplies

A	Base (1)	¾ x 13¼ - 15 5/16
B	Base Panels (6)	¾ ply. - 7 - 24½
C	Base Fillers (3)	¾ MDF - 4½ - 22
D	Decorative Edging (6)	½ x 1 - 2
E	Center Post (1)	1½ x 1¾ x 22
F	Pivot Mounts (2)	½ x 2¾ - 4
G	Book Leaves (2)	¾ ply. - 9 x 13
H	Book Plate Lip (1)	½ x 1 3/16 - 45¾
I	Edge Banding	⅛ x ¾ - 70 rgh.

- (1) ⅜"-dia. x ½" Brass Tubing
- (1) ⅜"-dia. Nylon Spacer
- (12) #8 x 1¼" Fh Woodscrews
- (3) 5/16" Cushioning Washers
- (1) ⅛" - ¾" x 13 Hardboard Spline
- (4) ¼"-dia. x ⅞" Hardwood Dowels
- (1) ¼"-dia. x 1⅞" Brass Rod
- (1) 5/16"-18 x 2⅝" Brass Knob (1"-dia.)
- (1) 5/16"-18 x 2⅝" Brass Knob (1½"-dia.)
- (1) 5/16"-18 x Brass Through Knob
- (1) 5/16"-18 x Brass Threaded Insert

Written by: Phil Huber; Project Design: Chris Fitch

▲ With three options to choose from, a carved bird may hop along a window sill or soar suspended from an eyelet and string.

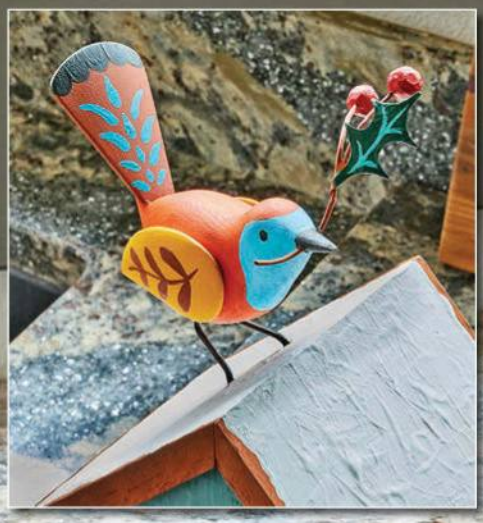

▲ The birds look great on their own, but a sprig of holly adds a festive touch. Check out how to make it on page 48.

Illustrations: Becky Kralicek

Carved Birds

Here's a trio of brightly colored guests to perk up a window view. Follow along to learn an approachable method for forming fluid shapes.

Woodworkers are a curious lot. The desire to make things for themselves leads along paths to new skills and possibilities. That's how I ended up learning about carving. I was quite content to stay within my straight, flat, and square world of projects. That is until I saw the work of Creative Director, Chris Fitch. Fast forward and now I have a couple small boxes of carving tools and enjoy the variety of projects that I can tackle.

One of the obstacles in learning a new aspect of woodworking is the "buy-in" of new tools that seems to be required. Chris's goal with these cheerful birds is to focus on the shapes and less on the carving-specific tools. If you follow the approach I outline here, most of your time will be spent at familiar furniture-making tools. Others with more carving experience may jump from the patterns shown on the next few pages straight to knives, gouges, or power burrs.

In a further effort to ease the learning curve, Chris uses basswood for the materials. This friendly wood species invites soft curves and flowing details with its mellow grain structure. You'll quickly see why carvers turn to it. Speaking of quick, I'm certain a whole flock of birds will migrate from your shop in a short time.

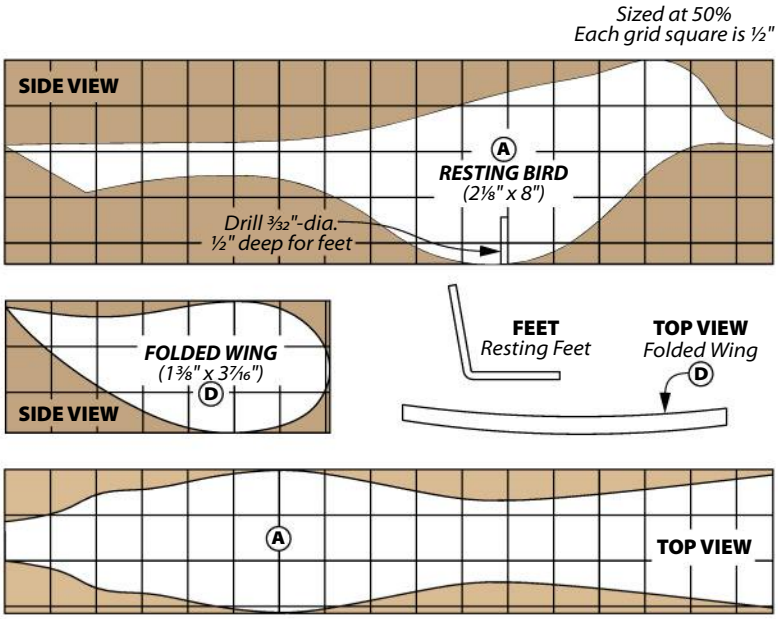

NOTE: *Bird bodies are cut from 1½"-thick hardwood. Fold wings are 5/16"-thick hardwood*

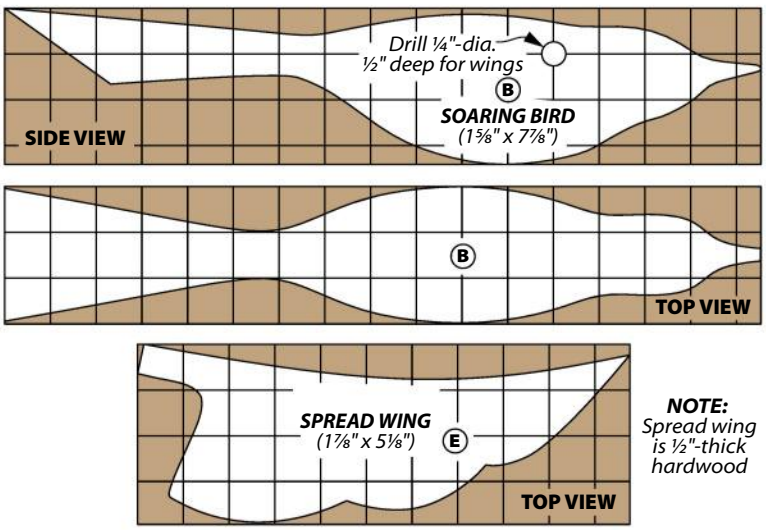

NOTE: *Spread wing is ½"-thick hardwood*

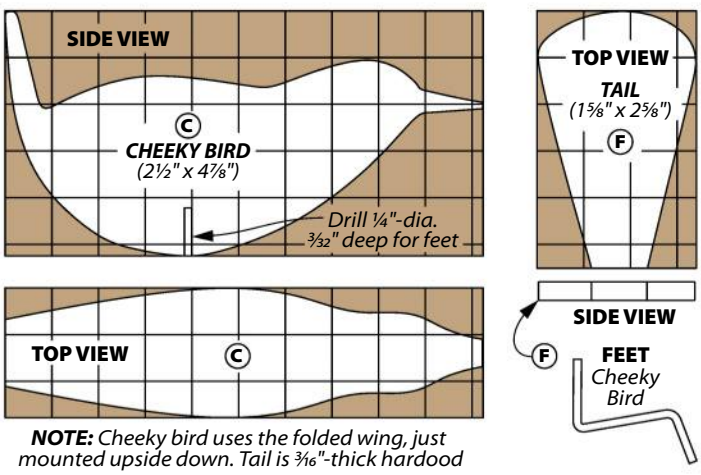

NOTE: *Cheeky bird uses the folded wing, just mounted upside down. Tail is 3/16"-thick hardood*

Three **DISTINCT BIRDS**

A *Woodsmith* project normally begins with an exploded view drawing that highlights the initial parts. You cut parts to size, form joinery, and the process is underway. That isn't the case here. Instead the focus is on shaping a single, solid-wood blank into a bird.

LAYOUT. The early work is to lay out the profile that you need. Chris created patterns, as you see at left. To use these, copy the page at 200% in order to get the full size. Or print full-size patterns from *Woodsmith.com/281*. Follow along with the box on the top of the next page for the primary stages. Additional work takes you from one to the next.

CUT OUT PROFILE. The next stage is to turn the square blank into a blocky bird form. I like to do this at the band saw, as in Step 2.

Leave your pencil lines so that you have a guide for the following steps. Try to make the cut in a smooth, continuous pass. The reason for this is that after cutting the profile, I taped the waste back on the blank. This provides support, and restores the Top View lines to cut this aspect of the bird.

CARVIN' TIME. Even though the part has depth, there's still a strong, 2D feel to the shape. The focus now turns to giving the bird's body some round and curved transitions.

In Step 3, you see Chris working with a knife to carve a bold chamfer on the corners. This gives you a good idea of what the shape should be. The chamfer is smaller on the beak and larger on the body. I sometimes draw in the chamfer with a pencil to serve as a guide for the knife work.

Each knife stroke teaches you about the grain direction of the workpiece. You want to carve with the grain's direction to avoid splitting out more than you intend. On the bottom side of the bird, it means working from its belly back to the tail or forward towards the beak. For the top side, the head is the high point (usually). So head-to-tail and head-to-beak are the directions you will cut.

With the chamfer complete, the next step is to blend these flat facets into curved shapes. This is done by carving a smaller chamfer on either side of the large chamfer. Don't feel like you need to get it perfect. I still consider this part of the process to be "rough work" in a similar vein as the band saw cutting.

You can go as far as you want with the knife. The process results in a surface that consists of tiny facets that you may find appealing.

REFINING & SANDING. Chris's aim was a smooth surface. So once the knife work got the overall shape, he moved to a spindle sander (Step 4). A large sanding drum allows you to refine the facets into contours. Keep the workpiece moving along the drum. This includes both along the length as well as rotating the bird against the drum. Otherwise you risk creating a divot where you linger. The basswood takes shape quickly here. Stop periodically to clean the drum with a crepe stick.

ASSORTED PARTS

I've spent most of the time talking about shaping the bird's body. The same advice applies to the separate wings and tail pieces. Steps 1 and 2 below offer additional guidance. These are glued in place.

FEET. Rather than wood feet, Chris used brass rod. It bends easily. Compare the bend to the pattern as you work. Finally, glue the feet into the body.

INITIAL ROUGHING OUT

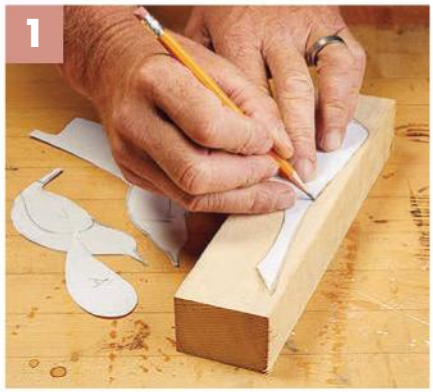

Patterns. Attach printed patterns to thick card stock for a traceable and reusable pattern.

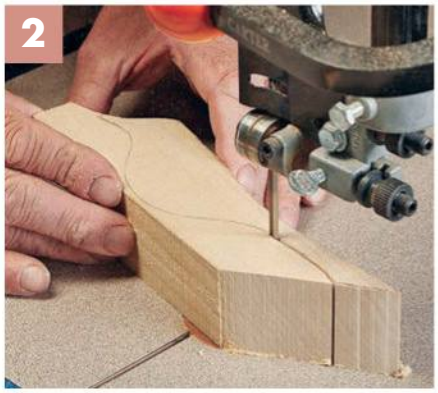

Rough Form. Save the lower waste piece to tape back on in order to cut out the top view of the bird.

Knife Work. A carving knife turns a square-edged blank into a bird shape with contours and facets.

Refine. A spindle sander with a large drum removes material, refines the form, and blends the details.

WINGS & FEET

Curved Slices. The wing blanks begin as curved sections cut from a thick block.

Trace & Shape. Trace the wing pattern and shape the wing in a similar way as you cut the body.

Bend Brass. Use the patterns to mark the locations for bending the brass feet with pliers.

HOLLY, NO IVY

Snip Leaves. Draw a holly leaf shape on the copper foil. The metal is thin enough to cut with ordinary scissors.

Solder Some Stems. Secure a leaf to a stem with solder. Make sure the pieces are hot enough to avoid a large puddle of solder.

Carve A Berry. Form a berry on the end of a ½"-square blank by carving a series of facets, going from a chamfer to a round shape.

Actual size
Each grid square is ½"

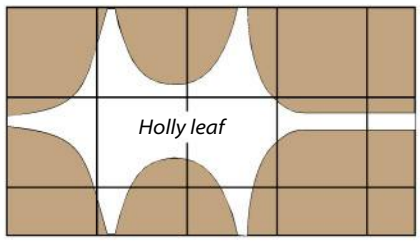

A Bird Needs **ACCESSORIES**

A carved bird, or a small flock of them, has its own appeal. However, I wanted to take these birds into a winter and holiday vibe. This includes adding some greenery and paint. I'll share the process we used on these pages. The same techniques apply if you would rather incorporate other foliage with your birds.

LEAF, BY YOU. Let's begin with the leaves. Just as we did with the birds, start by making a paper pattern. The holly leaf above is at full size. I recommend photocopying it instead of cutting up your magazine page.

The leaves are made from copper sheet. (Refer to Sources on page 66, for details.). Trace the pattern onto the foil with a fine-tipped marker. I thought that Chris used tin snips to cut out a leaf. Instead, an ordinary pair of scissors works just fine on the thin foil. This is shown in Step 1 at left. They're also far easier to steer around curves.

This is a good point for a reminder. The lines are guides. You aren't being graded on how closely you follow them. Since you're echoing a natural object, slight variations from one leaf to another are expected. You can start over with a new leaf if one doesn't cooperate with your cutting efforts.

BRANCH OUT. The holly branches, or twigs, are just short pieces of copper wire. So they can be snipped to length with a wire cutter. Chris went old-school to join the leaf and twig. He soldered the two together, as in Step 2. A hobby soldering iron works to heat the parts and melt the solder into the joint. According to Chris, this is a cleaner, more secure connection than epoxy or CA glue.

HOLLY BERRIES. The third element of the foliage is to make berries. The trick is to form the berries safely and comfortably.

Step 3 shows the secret. Rather than work with small pieces, Chris started with a length of dowel. You could also cut a long, thin blank from some of the basswood used on the bird bodies. This approach provides a better grip. It also keeps your hands away from the blade.

Mark the length of a holly berry with a pencil. While not crucial, the length should match the diameter of your blank. With a small knife, chamfer the end of the berry.

On the inside end, score along the mark with the blade. Then make similar angled cuts up to the scored line. A small chip should pop free.

As you did with the birds, blend the initial chamfers with more facets, moving from a pebble shape to something like a mini disco ball. How far you

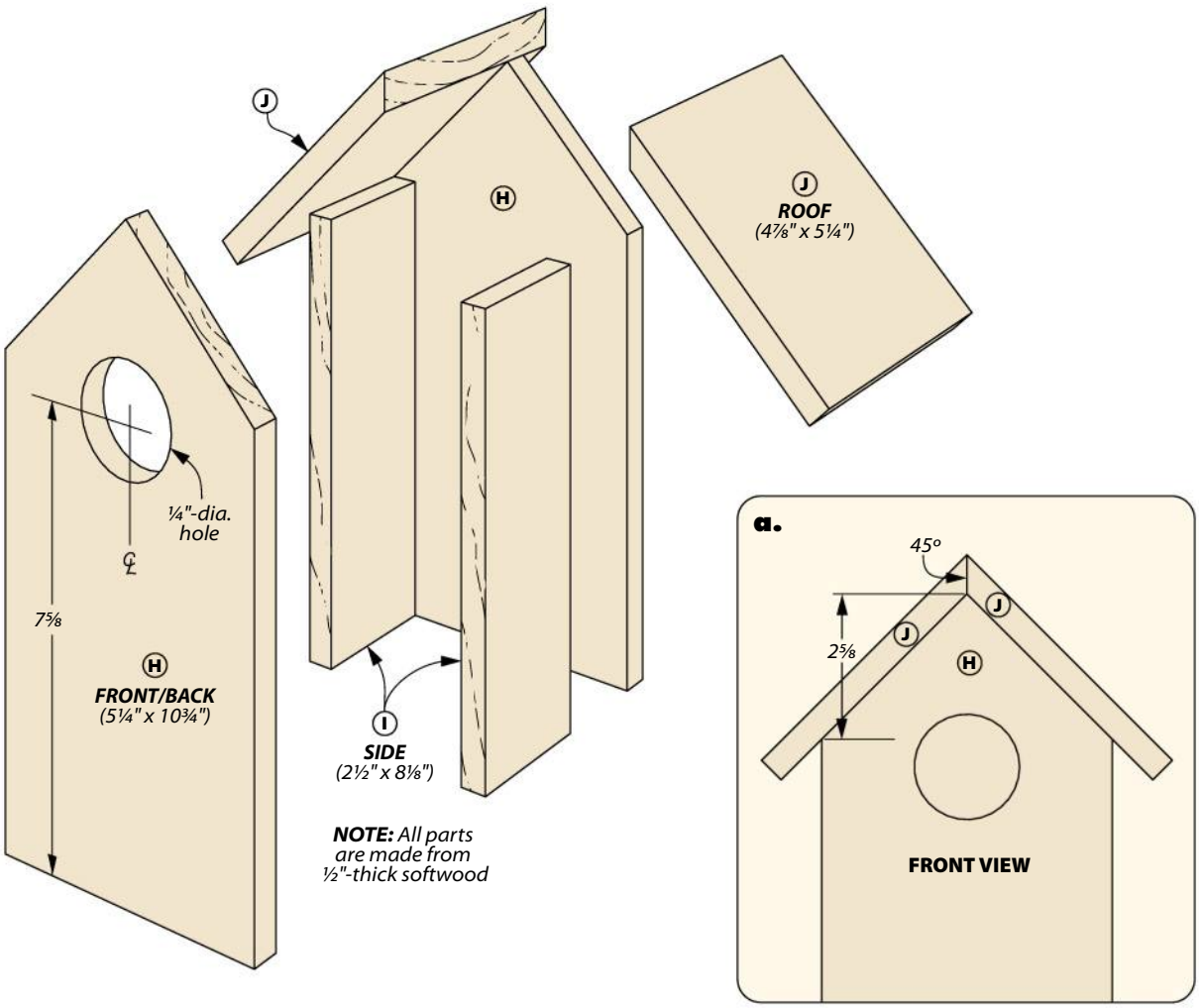

go is up to you. On the inner end, the neck connecting to the blank will get smaller and smaller. Repeat the rolling cut to release the berry. Sand down the small nub that remains.

I held the berries in a small wood handscrew clamp to drill a small hole. A dot of glue secures the berry to a twig — after painting. The greenery threads into holes that you need to drill into the beak of each of the birds. Novocaine not required.

A FITTING HOME

A set of birds was the original idea Chris presented. While carving the birds, it seems he couldn't help himself and decided to make them a home. Consider this house a bonus project — no carving involved.

NO-FRILLS. The house begins with the front and back. Since this is a "show house" the size of the opening isn't important (the birds won't fit anyway). The top end of these parts get a 45° roof peak, as in detail 'a' above.

The sides are cut to align with the roof angle. I glued the sides flush with the edges of the back, before adding the front.

The roof panels come last. These have a miter cut on the inner end, as in detail 'a.' The panels are centered front-to-back on the house body. You'll notice that there's no floor.

CUSTOM PAINT. Chris' paint motifs are highlighted in the article on 14. Once the paint is dry, you can thread the holly into place. The soaring bird is suspended by string tied to a small screweye.

These birds provide a low-barrier entry to learning to carve. Combine a mild-mannered wood species and a fun paint job, you end up with a project that's sure to get noticed. W

Materials & Supplies

A	Resting Bird (1)	1½ x 2⅛ - 8
B	Soaring Bird (1)	1½ x 1⅝ - 7⅞
C	Cheeky Bird (1)	1½ x 2½ - 4⅞
D	Folded Wings (4)	5/16 x 1⅜ - 3⅜
E	Spread Wings (2)	½ x 1⅞ x 5⅛
F	Tail (1)	3/16 x 1⅝ - 2⅝
G	Holly Berries (6)	½ x ½ - 8 rgh.
H	Front/Back (2)	½ x 5¼ - 10¾
I	Sides (2)	½ x 2½ - 8⅛
J	Roofs (2)	½ x 4⅞ - 5¼

- (1) 3/32" x 12" Brass Rod (for feet)
- (1) #14 x 24" Copper Wire
- (1) .022" - 12" x 12" Copper Sheet

Serving Tray Table

This two-part project sets a classy stage for your next get-together. The leg joinery and round tray certainly will keep you entertained in the shop.

Many furniture projects have a "just sits there" feel. It's not a criticism, that's the nature of a bookshelf. I for one enjoy when a project has an element of movement or transformation. This little table surprises with exactly that.

While coming off as a sleek, two-toned side table, the top moonlights as a serving tray. What I like about the effect is its simplicity. There's no hardware to release or folding of the base. Feet on the tray's bottom rest in divots in the base's stretchers.

With two distinct sections, it makes sense to go with different wood species. The tray is cherry. The rich color suits the function of serving and showing off what it holds. The table's base should feel solid. Here the bold grain lines of ash emphasize sturdiness. The dark and light tones along with the muted and distinct grain patterns complement rather than clash.

Design editor Dillon Baker picked up the movement idea in the design elements. The whole project has a subtle Art-Deco feel to it. You'll find a circle motif throughout the project: round legs, repeated cove and roundover profiles, and the tray itself. It brings a sense of unity to the various parts and pieces. By the end of the project, you'll gladly pour a round in celebration of another completed piece.

▲ The cherry tray works just as well as a standalone piece. You'll be ready for elegantly entertaining company no matter where they choose to gather.

▲ The three stretchers meet with miters in the middle. Thin splines register the parts and increase the joint's strength.

▲ Each leg is topped with a small cove profile. The pockets in the stretchers catch feet attached to the underside of the tray.

Written by: Phil Huber; Project Design: Dillon Baker

Illustrations: Becky Kralicek

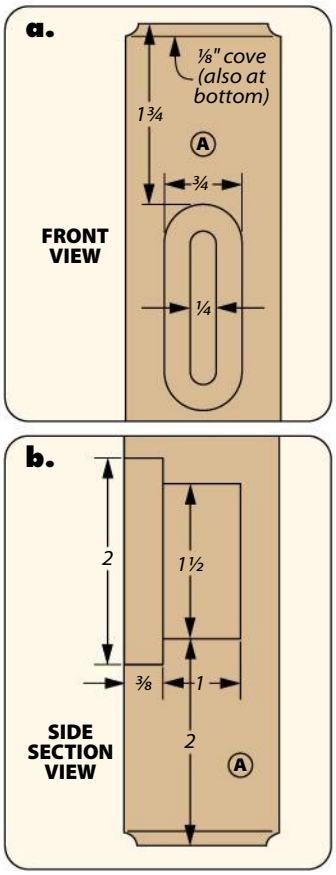

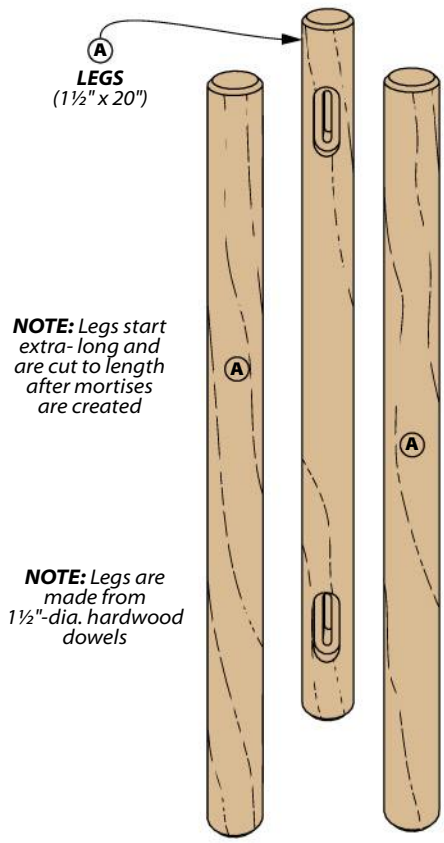

Round Out a TABLE BASE

If you're like me, one of the first questions about this project concerns the round legs. Are they turned? Do you rout them round at the router table? While you can do either of those, we chose to purchase round legs. You can find the source on page 66.

If you have a good woodworking store nearby, you can pick out 1½"-dia. dowels yourself. Bring along calipers and be prepared to spend some time sorting through the dowels to find three straight, consistently sized specimens. Leave the legs 2" extra long for the time being.

JOINERY. The second question has to do with forming the mortises in each leg, as in the left drawing. Shop Manager Marc Hopkins answered that one for me. (Whew!) He created the box shown in the drawings below. The idea is to make a round leg blank act like a square leg.

A stop in the end registers the top end of the leg. A screw on the opposite end keeps the leg from rotating. (This part gets cut off later.)

STEPPED MORTISE. The top of the box has two slots where the mortises are located. These slots, along with a plunge router, are used to create a stepped mortise. Detail 'a' below shows the main portion of the mortise created with a spiral upcut bit. A guide bushing follows the slot for this cut.

The second part of the mortise provides a seat for the stretcher. This cut is made with a dado cleanout bit. The bearing on the bit follows the edge of the slot, as shown in detail 'b.'

After dancing this two-step on each leg, you can cut them to final length. Each end receives a small cove formed at the router table.

LEG MORTISES

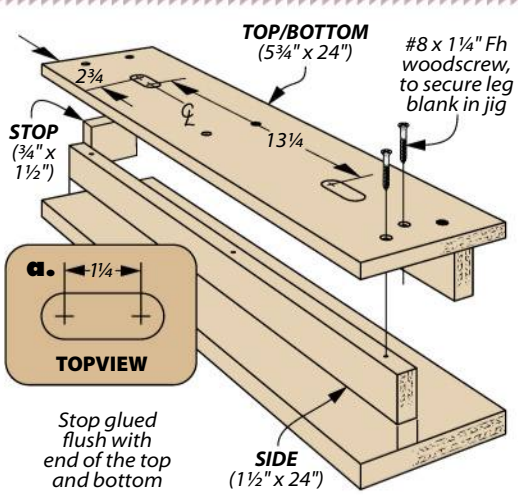

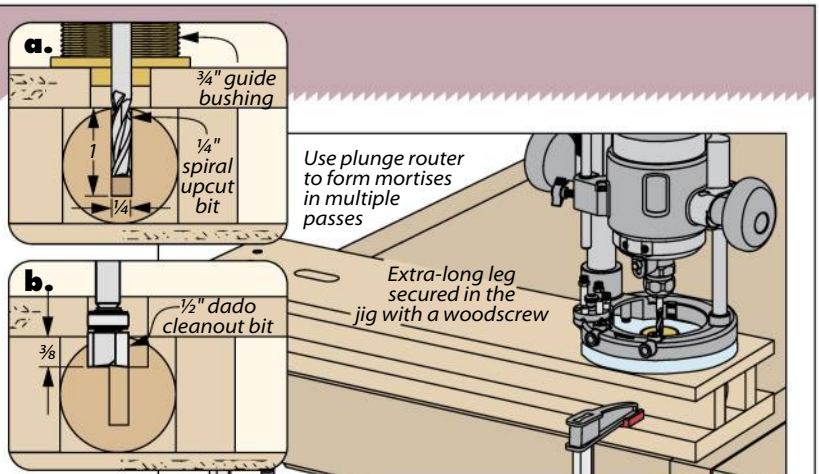

NOTE: All parts are made from ¾" plywood

Mortising Box. This plywood jig captures a round leg and provides a flat surface for the router to ride along. Openings in the top guide the bits for the stepped mortise.

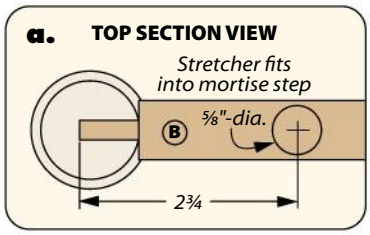

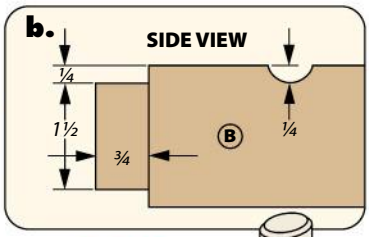

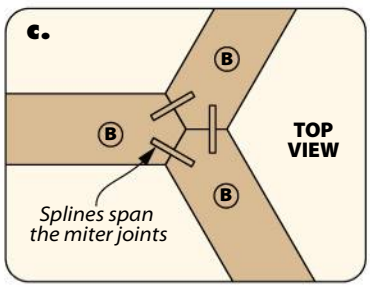

For a glue-up jig, visit our website:
Woodsmith.com/281

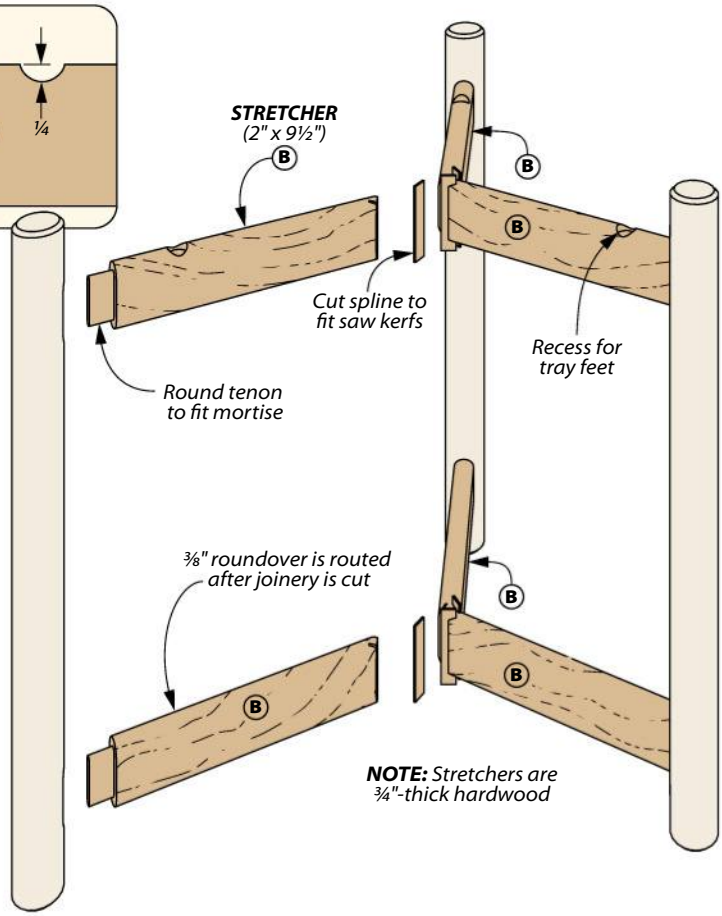

A TRIO OF STRETCHERS

A double layer of stretchers joins the legs, as you can see in the drawings at right. These end up rounded, but start square. Size the stretchers to match the width and length of the mortise step.

TENONS & MITERS. One end of the stretcher has a tenon to fit the mortise. Figure 1 below shows the initial shaping. You'll need to round the tenons to fit into place.

The other end of each stretcher is mitered to meet up with its pals in the center of the table base. With three stretchers, you need to pay attention to the angle. It isn't your typical miter. Figure 2 has the setup you need.

Three pieces coming together is a tricky glueup. One answer is to reinforce the miters with splines (Figure 3). Another aid is the assembly jig Marc created. Check it out at *Woodsmith.com/281*.

Two steps remain before you get out the glue: first head to the drill press to form a pocket on the upper stretchers, as in details 'a' and 'b' above. These are used to capture the feet of the tray. The second step is to round over the edges of the stretchers at the router table. These should be a firm slip fit into the mortise step in the legs (detail 'a').

Cut thin splines to match the slots. Then glue up the stretchers one set at a time.

STRETCHER JOINERY DETAILS

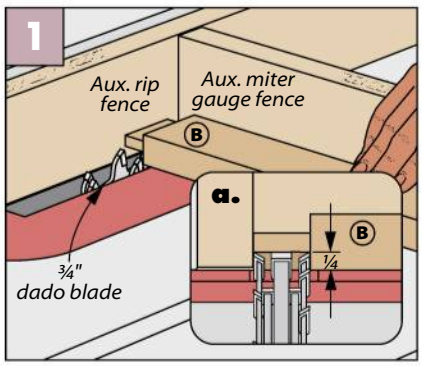

Tenons. Use a dado blade to form the cheeks and shoulders of the tenon. Then round the tenon with a file.

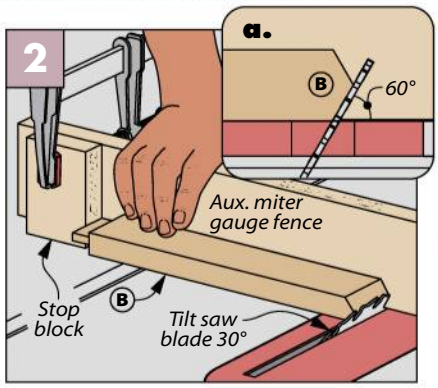

Miters. Tilt the saw blade to miter the inner end of all the stretchers. Use a stop block for consistent lengths.

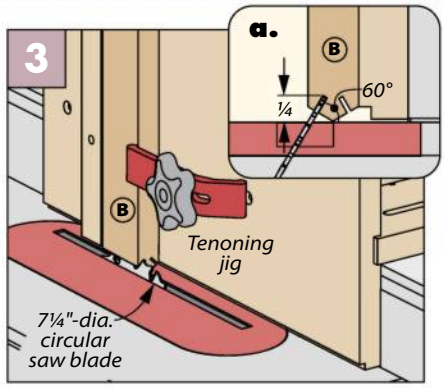

Spline Slots. Splines reinforce miter joints. For more on the technique, refer to the article on page 64.

▲ Notches in the tray wrap around the legs on the table's base. They're a fun detail, too.

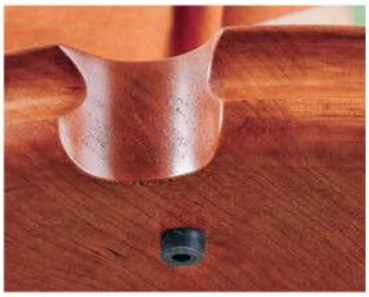

▲ Small rubber feet anchor into the recesses you drilled in the stretchers earlier.

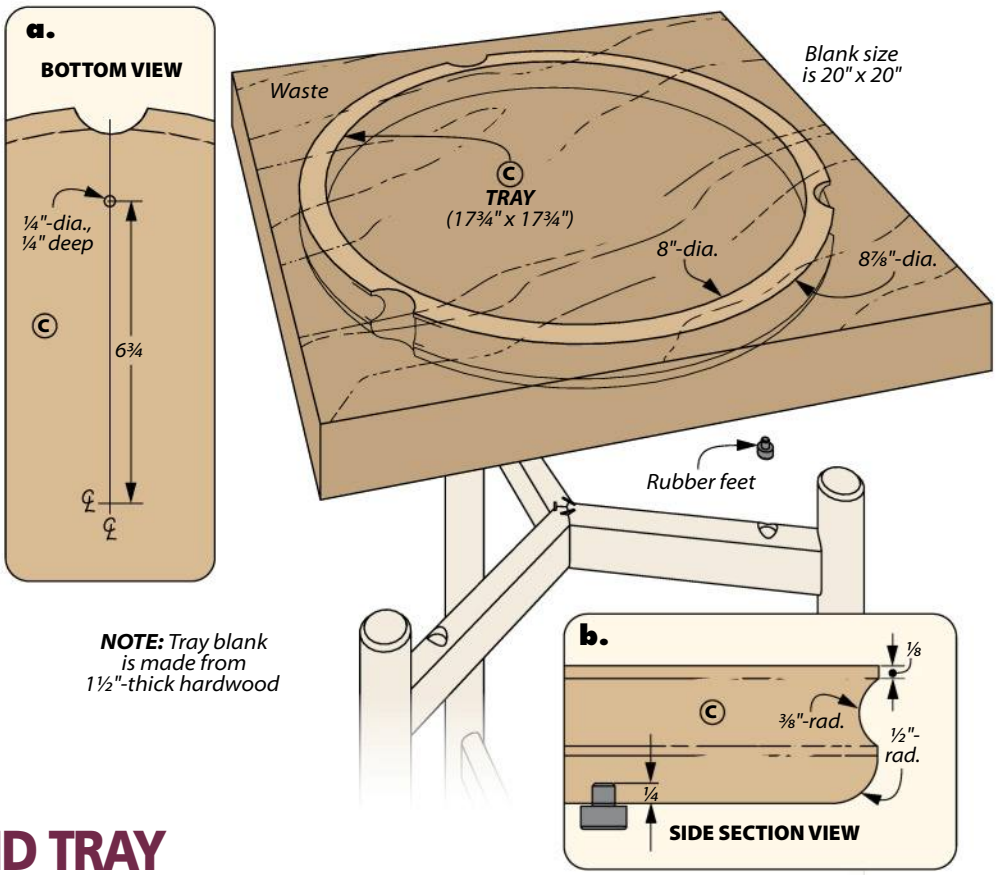

Let's Make a ROUND TRAY

It isn't often that you see a whole magazine spread devoted to a single workpiece. A quick survey reveals how much is going on. Gluing up a thick, oversized tray blank is where it all begins.

LAY OUT CIRCLES. Define the overall shape of the tray with a compass from a center point. Here you'll mark both the outside perimeter and the dished, inner portion.

One of the defining features of the tray is how it wraps around the legs in the base. That's the next layout task. The box at the bottom of the page explains how to do that. In theory, the

PRACTICAL GEOMETRY

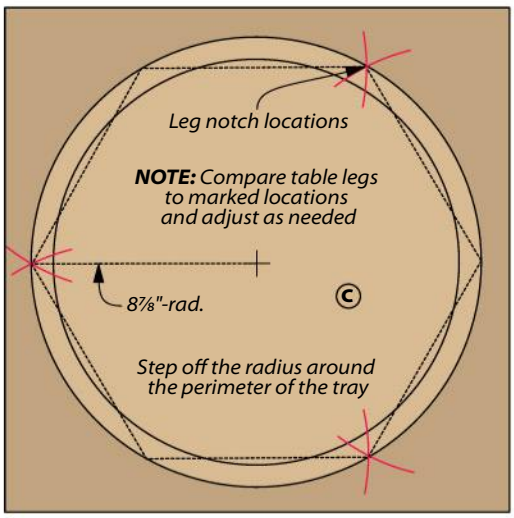

Math You Use. With a compass set to the tray's radius, step off around the perimeter. Every other step marks the location of a leg notch.

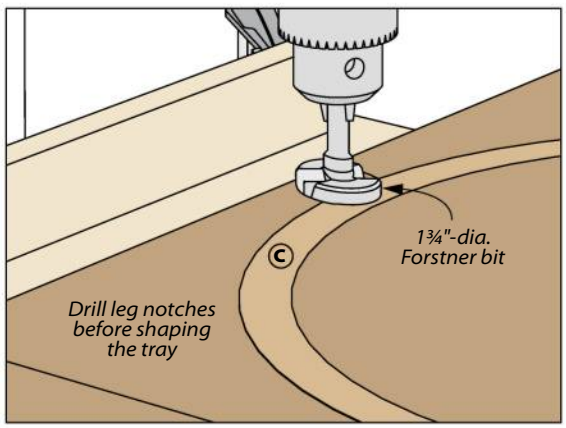

Verify, Then Drill. Compare the assembled table to your marks. Then drill out the notches in the tray blank at the drill press.

ROUTING AROUND & AROUND

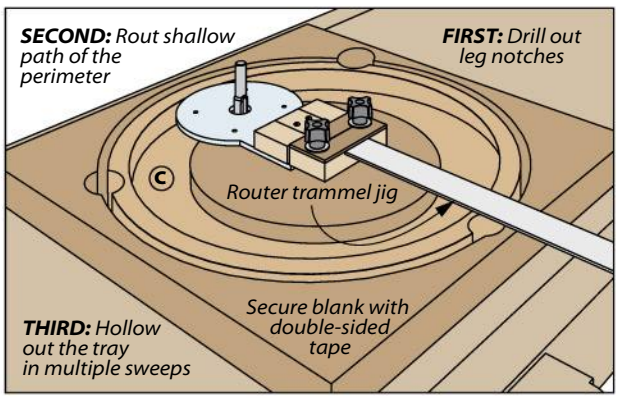

Circle Routing. Establish the outside of the tray with a ¾"-deep channel (cut in several passes). Then turn your attention to hollowing out the inside of the tray.

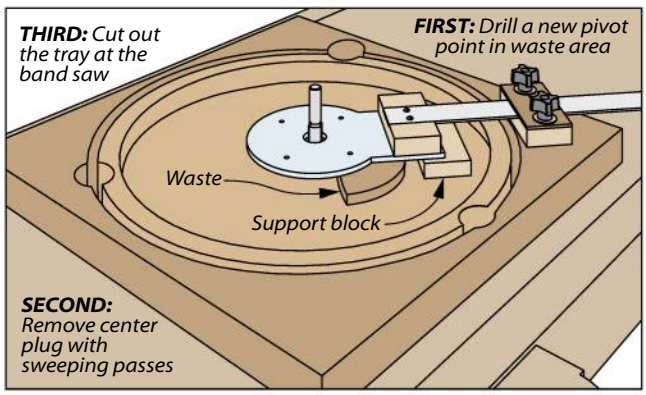

Off-Center Routing. Reposition the trammel outside the tray. Tape a support block to the bottom of the baseplate to keep the router balanced for the final passes.

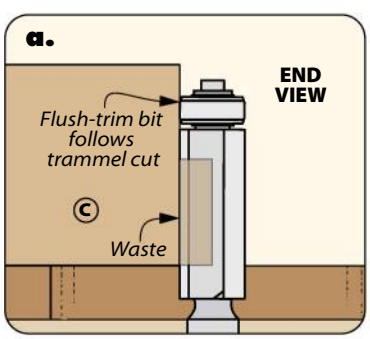

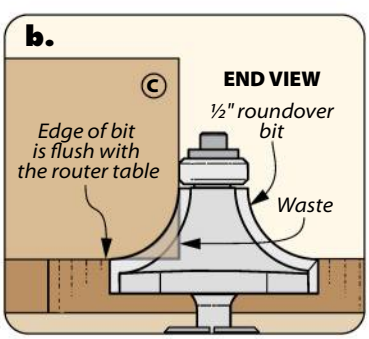

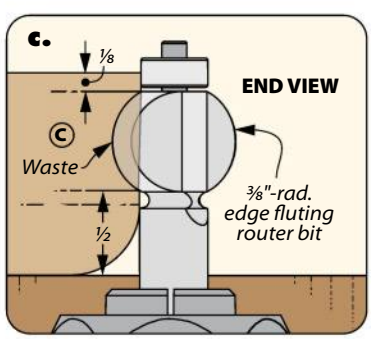

marks match up with the base you glued up. Just in case, set the base on the blank and see how close you are. There may be some adjustments necessary. Then drill the leg holes, which will become notches later.

SPIN IT RIGHT ROUND

I turn to a router trammel jig whenever I need to make a round tabletop. You'll give yours a workout for the next few steps. The box above highlights the process to follow.

Define the the outer edge of the tray with a few passes, but don't rout all the way through. We need the blank intact for the time being.

TURN, TURN, TURN. The inside of the table is hollowed next. Not only will you make passes around, but also progressively deeper. Then adjust the trammel for a tighter radius and repeat. You can make this go quicker by using a larger diameter bit. Keep your shop vacuum close by. This stage creates a drift of chips.

It's impossible to rout away the pivot point at the center of the tray. I routed as tight as the jig would allow. To remove the plug, I drilled a new pivot hole in the waste area outside the tray, as shown in Figure 2 above. With this arrangement, you can sweep across the plug. To keep the router from tipping in and spoiling your work, tape a support block under the baseplate.

CUT & SHAPE. Quality time spent with a card scraper and a sander results in a smooth inner surface. At this point, I cut the tray free, following the path that was routed earlier. I used the band saw, but a jig saw works, too.

Detail 'a' shows how to clean up the edges with a flush-trim bit. A roundover bit follows to ease the lower edge (detail 'b'). The final routing step is with an edge fluting bit (refer to sources on page 66). This creates a rounded groove around the tray, as in detail 'c.'

Rubber feet mounted on the bottom face line up with the recesses in the stretchers. Now it's time to put your feet up. W

Materials & Supplies

A	Legs (3)	1½ x 1½ - 20
B	Stretchers (6)	¾ x 2 - 9½
C	Tray (1)	1½ x 17¾ - 3

- (6) 1/16" x ½" - 2" Hardwood Splines
- (3) ½"-dia. Rubber Feet w/Screws

Written by: Rob Petrie; Project Design: Chris Fitch

Mid-Century Desk

This desk harkens back to the heart of our previous century. With strong construction and a sleek form, it's more than capable of earning a place in any modern home.

An artistic style, whether it's painting, film, music, or furniture design, is often a confluence of many aspects from its time. These styles recapture the zeitgeist of their era in a far more intricate and intimate way than rote facts and descriptions. The Mid-Century Modern style is an excellent example of this. The movement was led largely by those who had grown up or come of age in the Great Depression, imparting a sense of austerity to their work. At same time, the Second World War was over, the space race was beginning, and American homes had filled with TV sets just in time to watch it all occur. The world was moving forward and many designers sought to slough off the past, rejecting classical forms for more sleek, organic, and ergonomic ones.

The desk you see here pays homage to its namesake in several ways. First, it embraces minimalist sensibility, containing only what it needs: legs, rails, a top, and a drawer. Nothing more; nothing less. Second, it eschews sharp corners and perpendicularity to instead employ slanting angles and tapers, and a rounded motif throughout. The result is a desk that appears economical without being understated.

Of course, all this talk of style isn't to say that function has been put on the back burner. Cherry wood throughout results in one heck of a sturdy desk when combined with the thick mortises and tenons that connect the rails and leg assemblies. Simple hardware is used on the other parts: Z-clips attach the top to allow for seasonal movement, while the drawer rides on full-extension slides. The result is a streamlined design that can complement a variety of aesthetics while being strong enough to last for decades to come.

◄ A wide, long, yet shallow drawer attaches to the bottom of the desktop. Full-extension drawer slides offer easy access to the whole drawer — perfect for storing a litany of office supplies.

Illustrations: Harlan Clark

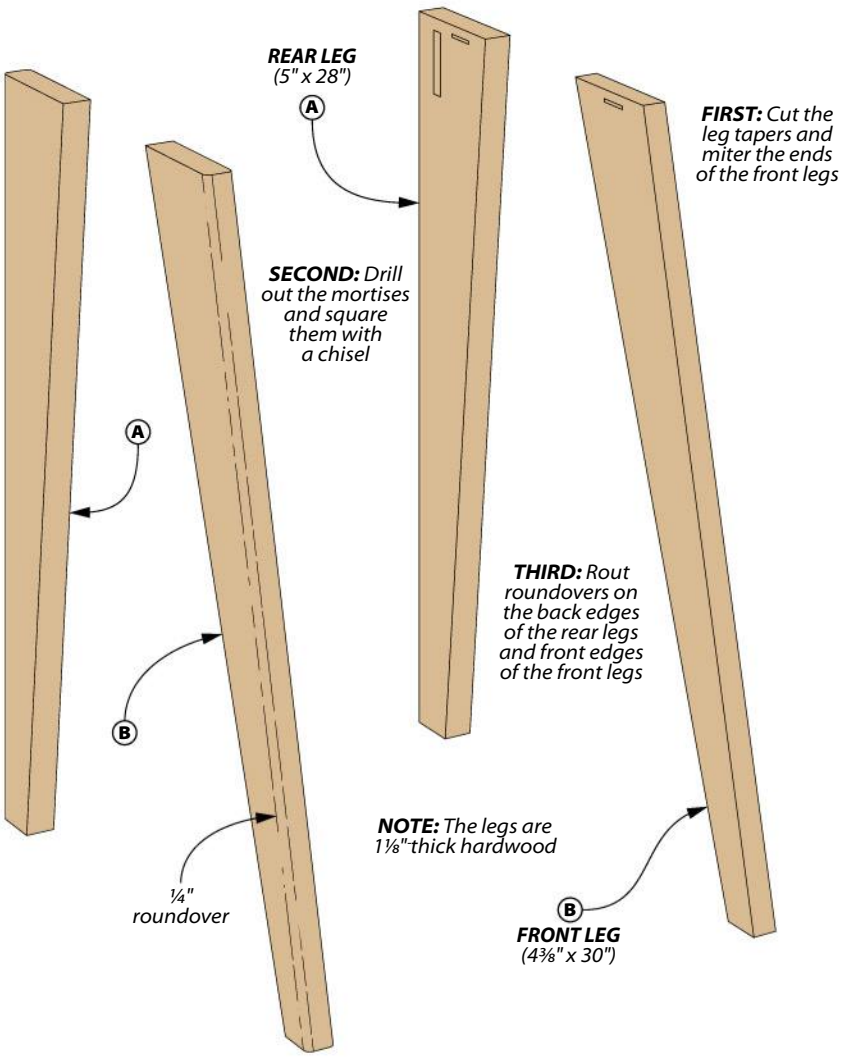

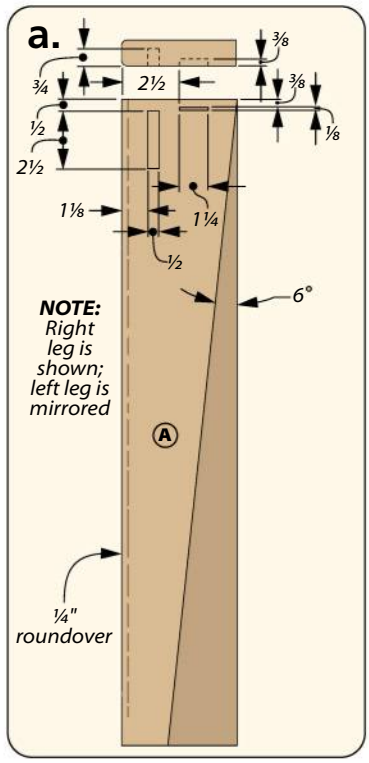

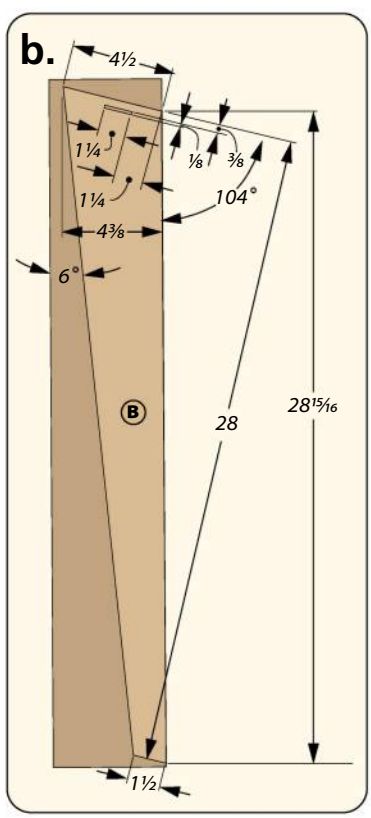

A Tapered Set of LEGS

The first task in constructing this desk is to set ourselves up with a trusty quartet of legs. As you can see above, both pairs of legs are tapered. In addition, the front legs are splayed forward. Of course, the first task as always is to mill down your lumber and cut it to size.

SHAPING THE LEGS. My legs began their lives as 6/4 cherry lumber. These parts are a key focal point of the desk, drawing the eye upward. As such, it pays to take your time in selecting as straight-grained of boards as you can find. Once you've chosen your pieces, you can plane them down and cut them to rough size. I recommend cutting them a little oversized for now to give yourself a little extra "meat" to work with.

Details 'a' and 'b' above and at right show the final shape of the rear and front legs respectively. There are a lot of dimensions, but the important ones to pay attention to now are the tapers and the angled ends of the front legs. First, we'll address the tapers.

TAPERING SLED. In order to hold the leg blanks at the correct angle during the next cuts, I created the sled shown on the following page. Its base is a long piece of hardboard, while two strips of ¾" plywood act as a fence and a stop. Both parts are simply stuck down with double-sided tape, with the fence sitting at 6° to achieve the taper.

Figures 1 and 2 show how I made the cuts. The sled holds the workpiece and rides along the fence. I cut the rear legs first,

then moved the fence in to cut the front legs. Keep these cutoffs. You'll see why later.

MITER CUTS. To finish the profile of the front legs shown in detail 'b,' they'll need to be cut at an angle on either end. I did this at the table saw, with my miter gauge rotated and an auxiliary fence attached to help support the long legs (Figure 3).

ROUNDOVERS. You may have noticed on the previous page that a few edges on these legs are rounded over. Eventually all of them will be, but for the moment, we'll only want to address the outer edges, meaning the rear edges of the rear legs and the front edges of the front legs. I did this at the router table using a roundover bit.

RAIL MORTISES. Now that the legs are shaped, it's time for some joinery. There are two sizes of mortises in the legs: first, broad mortises that will hold one of the rails later on, and second, narrow mortises that will accept Z-clips to secure the desk's top.

I began by laying out the bigger mortises. I like to lay these out first with a pencil for visibility, then with a marking knife to create an incision for my chisel later on. Starting out at the drill press, I removed the majority of waste initially with a series of overlapping holes, which cleaned out the mortise nicely.

To finish these larger mortises, I chopped out the sides and corners with a chisel. The lines from the marking knife give the chisel a place to register. Cut the ends first to sever the fibers — this will prevent tearout when chopping with the grain.

CLIP MORTISES. For the small mortises, this strategy is less than ideal. Here, I chose instead to rout them out with a plunge router and straight bit. A straightedge guides the base, while the cutoffs from tapering keep the base balanced.

LEG SHAPING & JOINERY

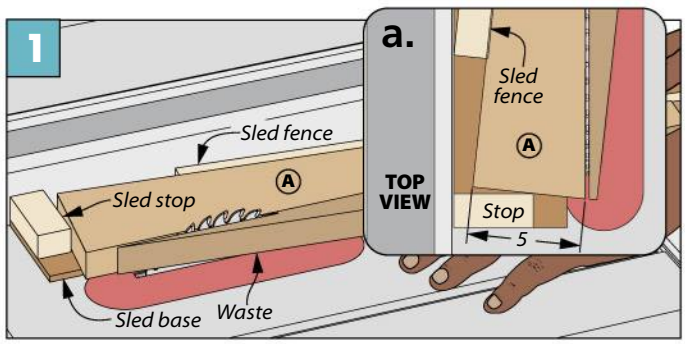

Tapering Sled. Beginning with the rear legs, cut the tapers at the table saw using the sled shown at right.

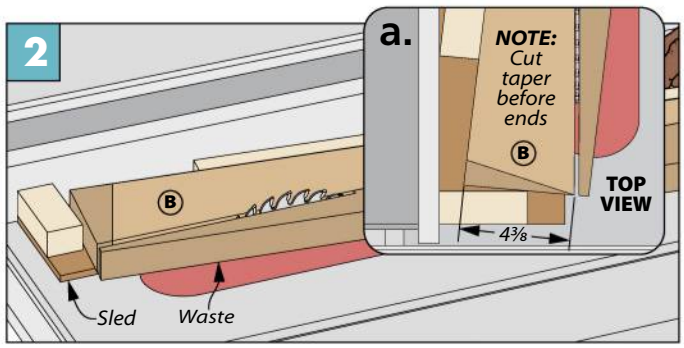

Front Taper. Cut a matching taper on the front legs. Be sure to do this before making the angled cuts on the ends.

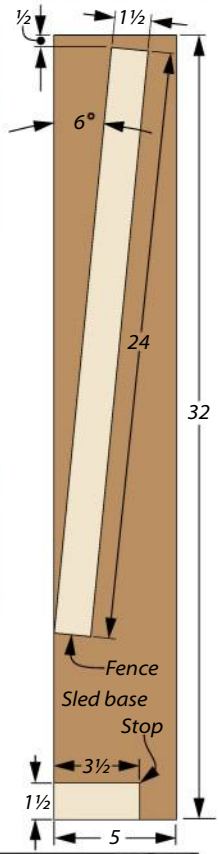

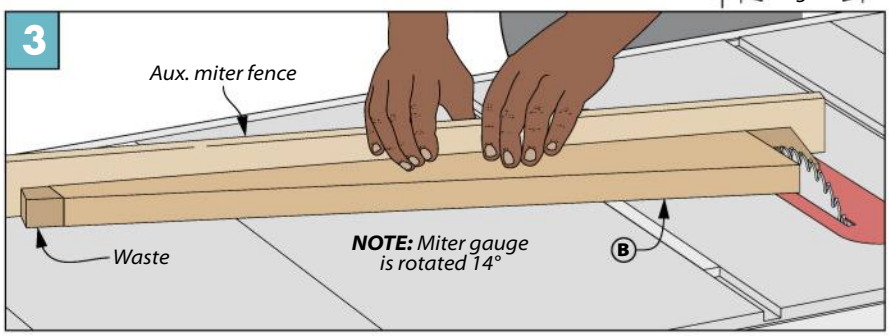

Front Leg Splay. To achieve the splay on the front legs, make angled cuts on both of their ends using an auxiliary fence on your miter gauge for support.

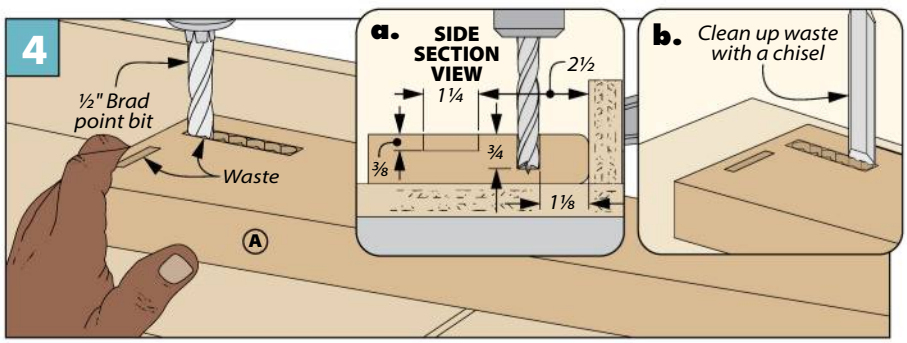

Rail Mortises. Begin by drilling out most of the waste with a series of holes at the drill press. Clean the sides and square the corners with a chisel.

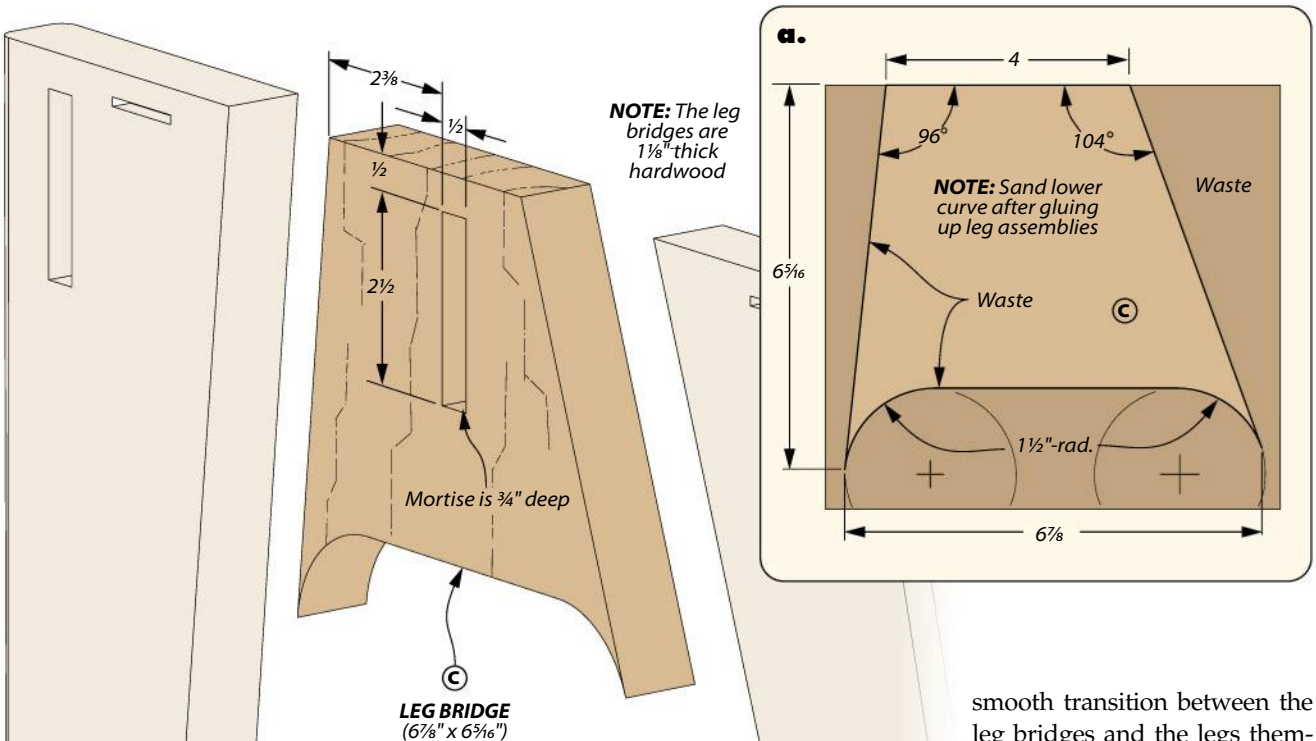

Join the Legs with BRIDGES

The next task on the desk is to connect the pairs of legs. To join the front legs with the rear legs, we'll need to build a set of the leg bridges you see above.

LEG BRIDGES. To kick off the leg bridges, I began by cutting a blank to size. Detail 'a' above shows the final size and shape of these parts, but I chose to begin with two 7" x 7" blanks.

BRIDGE ARCH. As you can see in Figure 1 below, after laying out the final shape, the first side I worked on was the bottom. I cut the waste here free at the band saw (once again, save the cutoff for later). Typically I'd remove the blade marks at the spindle sander next, but I held off for now. In order to get a smooth transition between the leg bridges and the legs themselves, I wanted to sand this curve after the glueup. So, for now, I moved onto the sides.

TAPERED SIDES. To match the angles of the front and back legs, the sides of the leg bridges needed to be tapered. I cut these at the table saw, using a miter gauge with an auxiliary fence tilted to match the leg angles. You can see these cuts being made in Figures 2 and 3 below.

MORTISES. As the illustration shows, each leg bridge houses

BUILDING BRIDGES

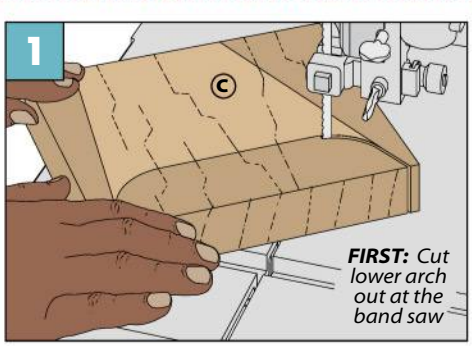

Band Sawn Curve. Cut the waste free from the arch. Sand this after assembly for a smooth transition between the leg parts.

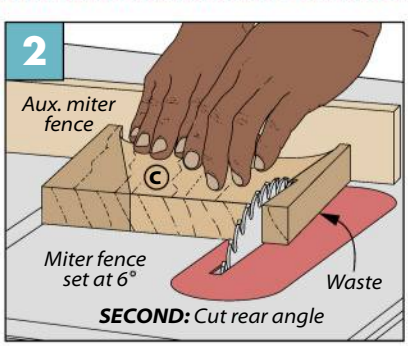

Rear Angle. To accommodate the taper on the rear leg, make angled cuts along the back of the bridges.

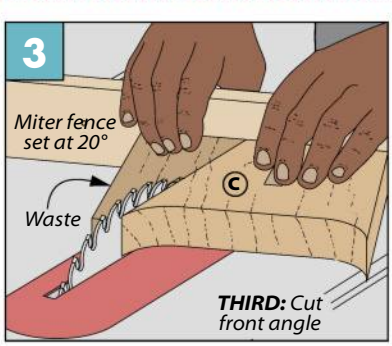

Front Angle. Due to the combined splay and taper, the angle on the front is sharper.

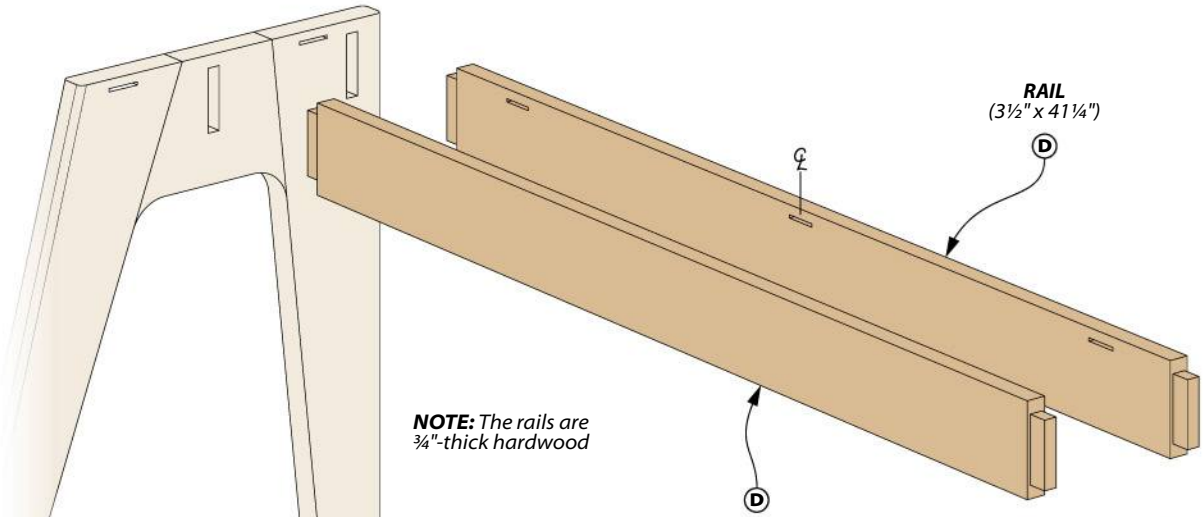

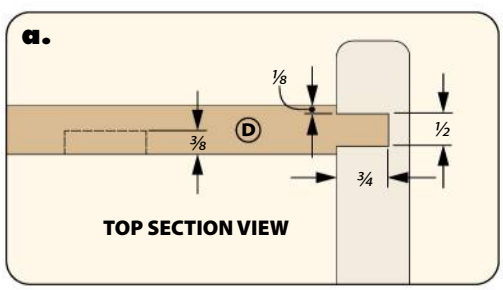

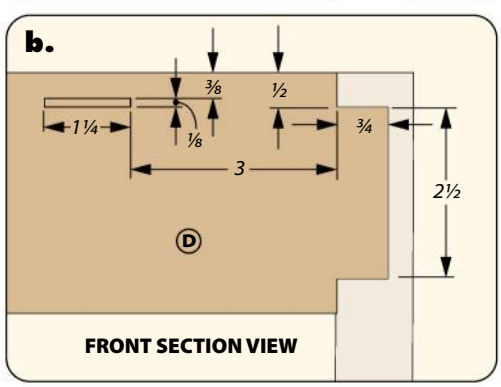

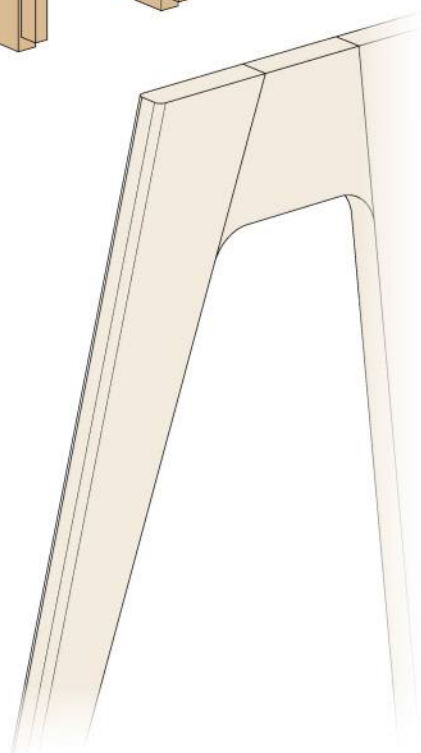

a mortised rail, just like the rear legs. These are an exact match for the ones you made earlier, so follow the same procedure and Bob's your uncle.

LEG ASSEMBLIES. Once the leg bridges are fully formed, it's time to make the two leg assemblies. Each consists of a rear and front leg joined by a bridge. These are simply glued together. However, angled surfaces like these tapered edges like to slide under clamping pressure.

To ensure everything stayed in place, I used cauls to assist the glueup. The cutoff from the bridge arch comes in underneath, and the opposite side of the assembly is held straight by using a straight board. To keep these pieces from joining the glueup permanently, I wrapped some packing tape around them. For the front and back, I cut a few scrap boards at supplementary angles to use as cauls there as well.

SHAPING THE ASSEMBLIES. After the leg assemblies have dried, there are two more tasks to address on them as whole units. First, I sanded the curve along the bottom that transitions to the legs. Once that was done, I got out my trim router and used it to roundover the interior curve of these assemblies on both sides.

RAILS

Next up came the rails. These are simple enough pieces with a few familiar bits of joinery.

TENONS. A pair of tenons on either end of the rails match the mortises in the leg bridges and rear legs. I cut these at the table saw, using the miter gauge and burying a dado blade in an auxiliary fence. Making these after the mortises allows you to sneak up on the final size, ensuring a tight fit between the parts.

Like the legs, the rails also contain narrow mortises for Z-clips. I cut these as I did before, with a plunge router and a narrow straight bit.

ASSEMBLY. The rails are made, and all that remains is to glue them into the legs. While they dry, you can begin on the top.

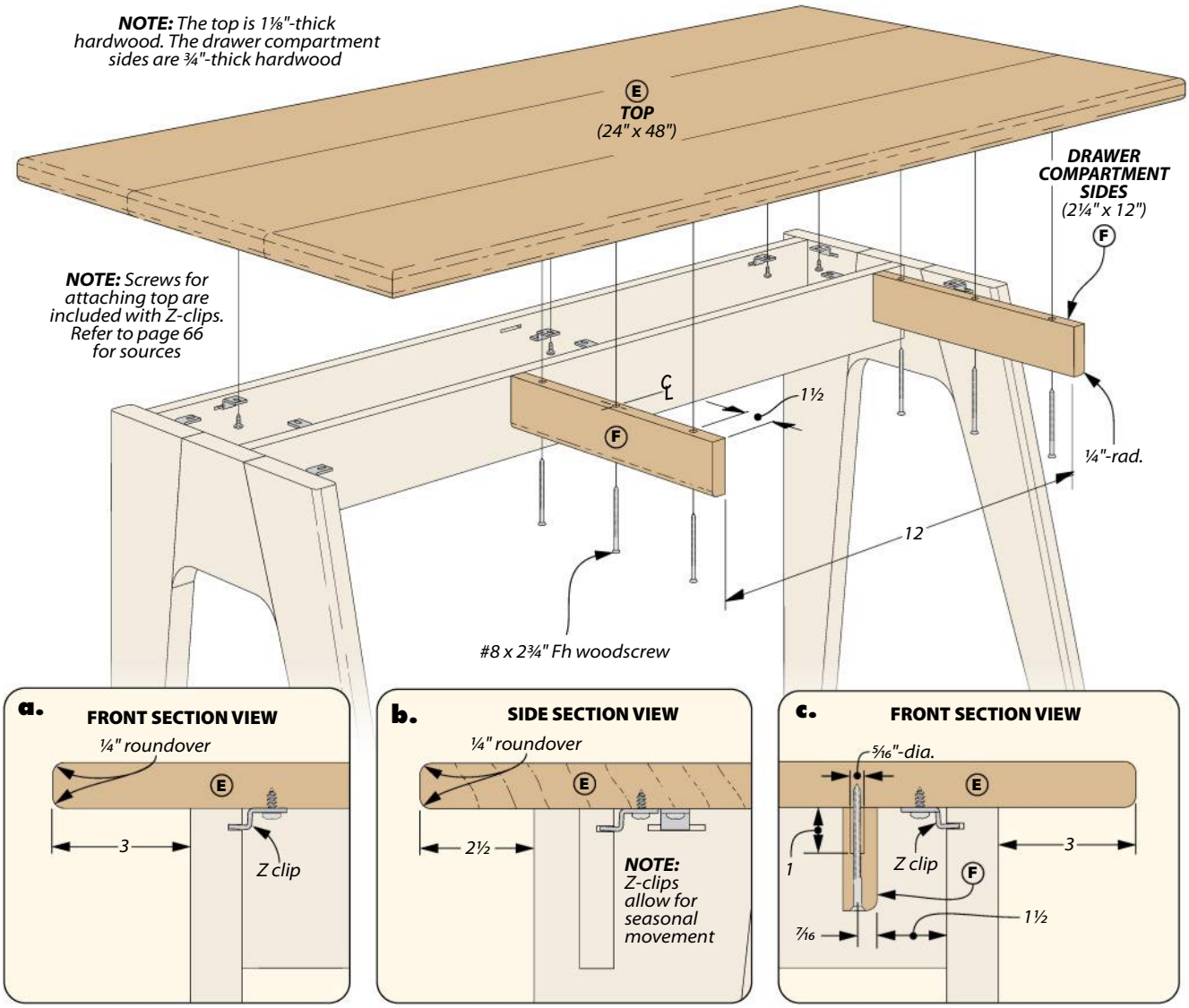

Finish the Desk with a TOP & DRAWER

With the legs assembled and standing on their own, we can now address the final series of parts — and perhaps the ones most important to a desk.

A STURDY DESK TOP. In making the top, the first step is to glue up the panel. Once the clamps come off, cut the panel to the dimensions shown in the illustration above. After that, the only task left on the top is to rout roundovers along the top and bottom edges (as in details 'a' and 'b').

DRAWER COMPARTMENT. No desk would be complete without a handy hideaway to accumulate pencils, pens, *Post-its*, and other miscellany. Making the drawer comes on the next page, as we'll need to create the compartment for it first.

The compartment is simple: two side pieces screw on beneath the top and provide a landing pad for the slides the drawer will be attached with. After cutting these pieces to size, I began working on them at the drill press.

Since the grain of these parts will be perpendicular to that of the top, we needed a way to account for movement as the humidity changes. Detail 'c' shows what we did. Long woodscrews travel through the width of the compartment sides to attach them to the top. After dilling the pilot holes, I bored out wider channels in the upper portions of them. This allows the screws to flex as the wood moves.

Last here, I routed a roundover along the outer, bottom edges of these two compartment pieces; this matches the rounded motif on the other parts. From here, these pieces could be attached to the top (alongside the leg assembly), but I chose to hold off — and I think you'll see why.

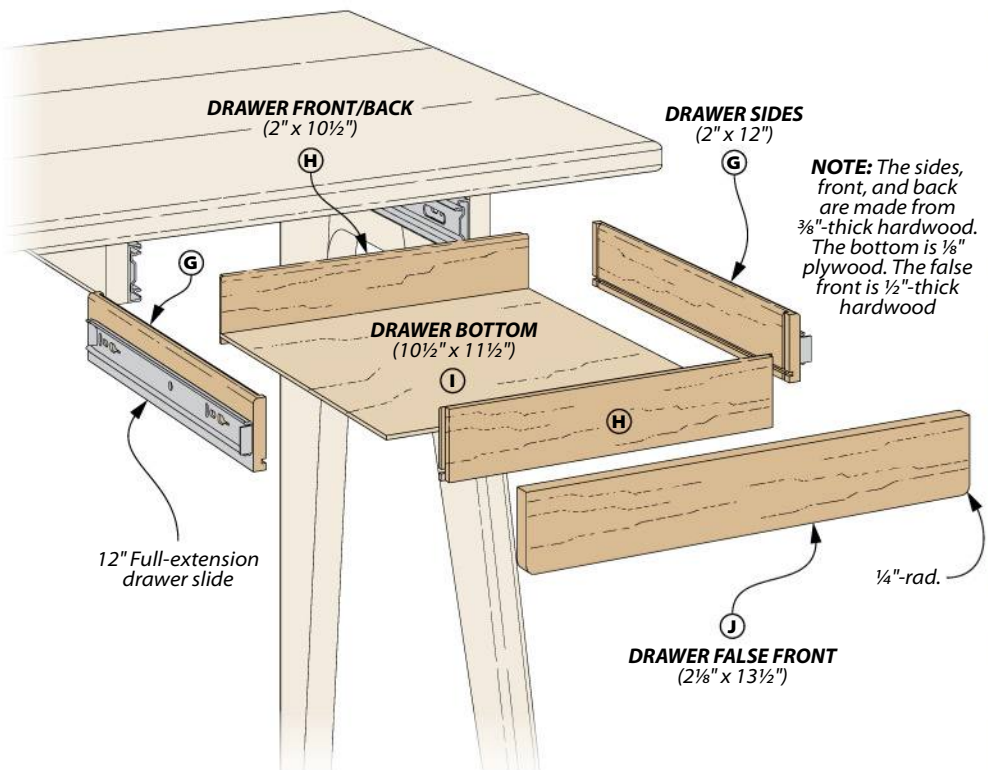

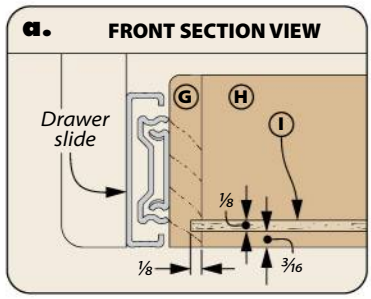

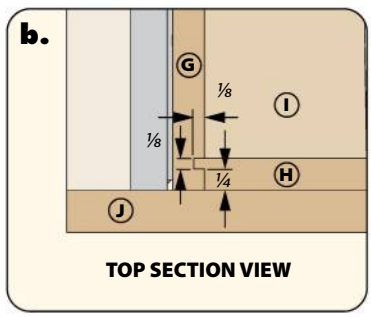

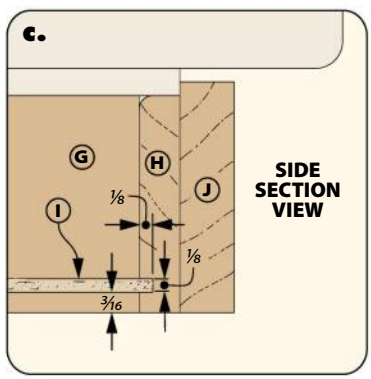

DESK DRAWER

The final piece of this office puzzle is a drawer. Given the items that usually tenant a desk drawer, we chose to make this one wide and deep, though relatively shallow. Tongue and groove joinery makes for sturdy construction, with a false front that hides the joints while it's closed.

TONGUE & GROOVE JOINERY. Using tongues and grooves is an easy way to assemble a drawer while maintaining long-lasting strength. For those unfamiliar with tongue and groove drawers, grooves are cut into the sides to accept tongues that have been rabbeted onto the front and back. I prefer to begin with the grooves, as I can then fit the tongues to them. Cutting the narrow grooves (like you see in detail 'b') can be done with either a straight bit or a flat-top blade at the table saw. For rabbeting the tongues, I buried a dado blade in an auxiliary rip fence, then snuck up on the final fit by edging in the fence as I tested it.

BOTTOM PANEL. Once the front and back are fitting nicely into the sides, cut the grooves for the plywood bottom. Again, this can be done with a single pass from either a straight bit or a flat-top blade. Then cut the drawer bottom to size and glue the parts together as in the illustration above.

DRAWER FALSE FRONT. Finally comes the false front. After cutting it to size, head to the edge sander to round off the bottom corners, then glue it to the drawer box. Since the grain travels in the same direction here, face-gluing these two is acceptable.

ASSEMBLY. To bring together this sleek desk, I started with the top flipped upside down on my workbench. I then brought in the leg assembly, attaching it to the top with the Z-clips. I installed the halves of the slides on the drawer and drawer compartment pieces next and fit them together. Finally, I screwed this assembly on, aligning the drawer as in detail 'c' on the last page. W

Materials & Supplies

A	Rear Legs (2)	1⅛ x 5 - 28	F	Dwr. Compartment Sides	¾ x 2¼ - 12	•	(10) Z-clip Fasteners w/ Screws
B	Front Legs (2)	1⅛ x 4⅜ - 30	G	Drawer Sides (2)	⅜ x 2 - 12	•	(6) #8 x 3" Fh Woodscrews
C	Leg Bridges (2)	1⅛ x 6⅞ - 6 5/16	H	Drawer Front/Back (2)	⅜ x 2 - 10½	•	(1 pr.) 12" Full-Extension Drawer Slides
D	Rails (2)	¾ x 3½ - 41¼	I	Drawer Bottom (1)	⅛ ply. - 10½ - 11½		
E	Top (1)	1⅛ x 24 - 48	J	Drawer False Front (1)	½ x 2⅛ - 13½		

Mighty Miters

Confession time: I avoid miters if at all possible. Tight mitered corners on a box look great, but there's a lot that can trip you up. First off, you need to cut clean miters in every mating part. Not only that, the angle of those miters needs to be dead-on to avoid a gap in one or more of the corners. And I mean dead-on.

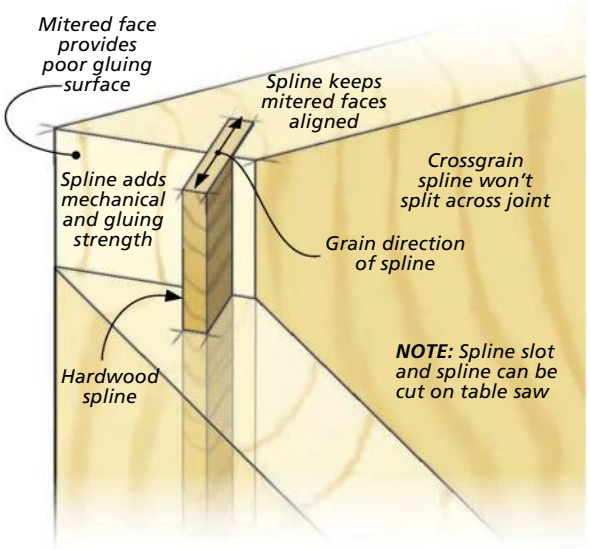

At assembly time, miters conspire against you. They slip and slide to avoid alignment. Plus, the porous end grain soaks up glue that leads to a weak joint.

MY ALLY IS THE SPLINE. So it's with admiration that I observe other woodworkers step into the ring with a miter. From their examples, I learned a method to tame some of the unruliness of this vital joinery technique. The secret is the spline. Splines are found all over, incidentally. They appear in construction as well as medicine. To sum up, a spline is a separate component that reinforces an assembly. I consider splines part of the loose tenon family. The drawing at left illustrates this concept with our current topic.

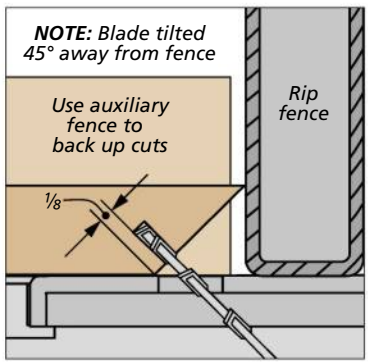

I see two quick benefits. First, the spline registers the two parts in relation to each other. This eliminates the sliding around that occurs once glue hits the surfaces. The splines allow for clamps to hold the joints tight.

The other benefit is how a spline increases the glue surfaces. This results in a stronger assembly. This attribute holds

Written by: Phil Huber

greater importance as the project size increases. (Many times in small boxes, you can get by without splines.)

MITERS FIRST. Of course, cutting miters on the workpieces is where you start. As important as it is, it's not the focus here. Once this is done, there are two remaining steps to add a spline to the joint: the first is to cut matching slots in the mitered faces. The second is to make a spline.

THE SLOTS

Think of the spline slots as mortises, and you have a good idea of some of the considerations you need to make in the slot size and location. The right drawing on the previous page illustrates this with a table saw setup.

When you place the slot closer to the "heel" of the miter (about 1/8" from the edge in 3/4"-thick stock), this allows you to cut a deep slot and use a long spline. Avoid extending the slot through more than half the thickness of the workpiece.

SETTING UP THE SAW. In the drawing, the blade is tilted to 45°. The principle behind this angle is that the slot is perpendicular to the face of the miter.

The rip fence locates the slot consistently on each mitered face. The distance between the blade and the rip fence determines the slot's position.

CUTTING SLOTS. When the project is made up of narrow parts, I guide the workpiece with the miter gauge. An auxiliary fence backs up the cut.

For a wide plywood or solid-wood panel, the rip fence is the only guide you need. You simply slide the long, mitered tip of the workpiece along the fence as you would for cutting a groove. A featherboard keeps the workpiece flat on the saw table and the slots consistent.

THE SPLINES

The splines that fit the slots must fit snugly but still slide easily into place. Take care here. I find that PVA wood glue tightens up the fit. Liquid hide glue (often my first choice) lubricates the parts for assembly.

If we stay with the mortise and tenon comparison, it should be clear that the splines need to be strong for a solid assembly. There are several ways to reach this goal.

SPLINE OPTIONS. For solid-wood assemblies, like the one in the main photo on the previous page, I use solid-wood "crossgrain" splines, as the margin drawings explain.

A strip of 1/8" plywood or hardboard gives you a strong spline with a fit that's ready-made for a 1/8" saw kerf when assembling wide plywood panels. In these situations, the edges are generally covered and the ends of the splines are hidden by strips of edging. For a long miter in solid wood when the spline will show, I use a different approach. Here, a plywood spline can be cut to fit short of the slot ends. Then hardwood caps are added to create the look of a hardwood spline.

Miters shouldn't be scary. Adding splines is a simple technique that yields big benefits. W

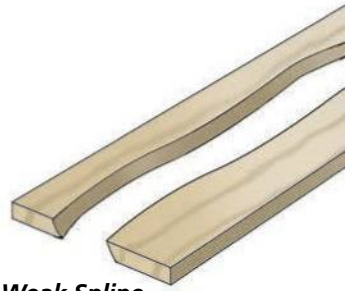

Weak Spline. A long grain spline can easily split along its length.

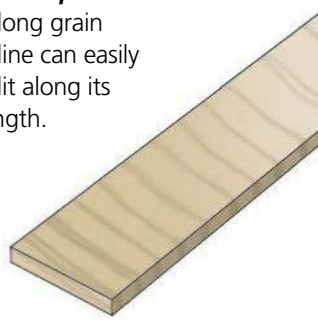

Much Stronger. A cross-grain spline is guaranteed against splitting and creates a stronger joint.

Woodsmith GO ONLINE EXTRAS

For information on making strong splines, go to Woodsmith.com/281

SPLINE GROOVES ON THE TRAY TABLE

In some ways, it's easier to wrap your head around a 45° miter. It's just more common. In the tray table on page 50, Shop Manager Marc Hopkins took a different tack that I think is worth highlighting, since we're on the topic.

There are two items to note about his approach. First, rather than use a miter gauge to guide the workpiece, he went with a tenoning jig. This holds the workpiece vertically. The piece is clamped in place, so it's less likely to shift during the cut. The jig shown here is a shop-made version that rides along the rip fence for easy setup and use. You can find the plans for it at *www.WoodsmithPlans.com*. A commercial tenoning jig would work as well.

The second detail is the blade Marc used. To avoid a fragile tip between the kerfs, Marc installed a very narrow 1/16"-kerf blade. These aren't common, an alternate choice is to use a 40-tooth blade from a portable circular saw.

One last item: note that the rip fence is located to the left of the blade in order to make the cut.

Go Vertical. A tenoning jig is another way to cut the slots for a spline to reinforce a miter joint. Here, three parts join together with 60° miters. So the table saw blade is only tilted 30°. A digital angle gauge works better than the saw's scale.

Sources

Most of the materials and supplies you'll need to build the projects are available at hardware stores or home centers. For specific products or hard-to-find items, take a look at the sources listed here. You'll find each part number listed by the company name. See the left margin for contact information.

MAIL ORDER SOURCES

Project supplies may be ordered from the following companies:

Woodsmith Store
800-444-7527
store.woodsmith.com

Bell Forest Products
877-770-9663
bellforestproducts.com

Grizzly
800-523-4777
grizzly.com

JessEm
506-777-2582
jessem.com

Lee Valley
800-871-8158
leevalley.com

McMaster-Carr
630-600-3600
mcmaster.com

Old Masters
800-747-3436
myoldmasters.com

Reid Supply
800-253-0421
reidsupply.com

Rockler
800-279-4441
rockler.com

Uneeda
845-426-2800
sandpaper.com

Woodcraft
800-535-4486
woodcraft.com

Woodline USA
800-472-6950
woodline.com

TIPS & TECHNIQUES *(p.6)*

- **Lee Valley**
  Toggle Clamp 88F0501

GREAT GEAR *(p.22)*

The product number for this issue's Great Gear lineup can be found below. I've included the number for *Uneeda*'s 6" orbital sander with a hook-and-loop interface and vacuum mount, though a variety of sanders, sanding discs, and sandpapers can be found on their website in the margin.

- **JessEm**
  STS Stock Guide. 04320
- **Grizzly**
  Benchtop Planer G0999
  Brush Sander G0400
- **Uneeda**
  6" Orbital Sander P-104997

LUMBER CART *(p.28)*

- **Rockler**
  24" Drawer Slides 48656
- **Grizzly**
  8" Casters G8179
- **Reid Supply**
  Drawer Handle KHO-10

The lumber cart was finished with two coats of clear lacquer.

MUSIC STAND *(p.36)*

My plywood of choice for the music stand was oak-veneered MDF-core plywood. I stained the plywood parts with a cherry gel stain from *Old Masters*. The accenting mahogany parts were left unstained, but the whole piece was given a few coats of spray lacquer for a nice shine in the photos.

- **McMaster-Carr**
  Nylon Spacers. 94639A834
  1"-dia. Studded Knob. . 5125K65
  1"-dia. Insert Knob. . . . 5125K23
  1½"-dia. Studded Knob . . .5125K66
  5/16" Cushion Washers 90131A631
  5/16" Threaded Insert. . 90016A030
  3/8" O.D. Brass Tubing. . 8859K28

HOLIDAY BIRDS *(p.44)*

The birds are made from basswood. You can purchase basswood carving blanks from most woodworking stores or online. You may even be able to find some locally.

SERVING TRAY TABLE *(p.50)*

We decided to purchase dowels to use for the legs on the table. You can feel free to turn the legs or use make them at the router table. The site listed doesn't have a search function. So you'll navigate by wood species. The finish on the tray and table base is two coats of spray satin lacquer.

- **Bell Forest Products**
  White Ash Dowels 17724
- **Woodline**
  3/8" Edge Routing Bit WL-1475

MID-CENTURY DESK *(p.56)*

The cherry hardwood of the Mid-Century Desk looks wonderful with a few coats of spray lacquer, though wipe-on varnish or tung oil would also be attractive options.

- **Lee Valley**
  12" Drawer Slides. 45859
- **Woodcraft**
  Z-Clip Fasteners. 159301

RAZOR-SHARP EDGES in 5 Minutes!

The *Woodsmith* Cabinet Scraper System offers a foolproof method for getting a consistent, razor-sharp edge using only a few simple tools. The secret is in the *Woodsmith* jig—a unique tool that lets you file the edge and then create the bur.

Item# 7512124
Woodsmith Cabinet Scraper System $59.99

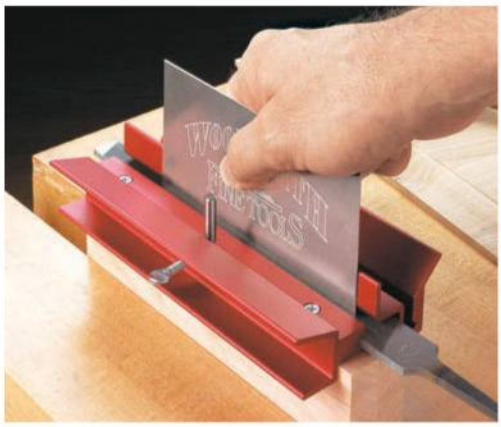

NEW!

GO HANDS FREE, STAY HANDS ON

Batch Work

Signmaking

Inlays

Joinery

Profiles and Templates

Introducing BenchPilot

Like autopilot for Shaper Origin, let BenchPilot drive while you focus on other tasks at hand.

- The easiest CNC on the market
- No computer programming required
- Cut vertically or horizontally
- Clip in for automated control, unclip for handheld CNC cutting at any scale!

SHAPER

PRECISION CUTTING SIMPLIFIED

INCREDIBLY STRONG
GORILLA
100% TOUGH
WOOD GLUE
ORIGINAL
Incredibly Strong
Type II - Water Resistant
No Foaming
DRIES NATURAL COLOR
DON'T JUST GLUE IT.
FOR THE TOUGHEST JOBS ON PLANET EARTH®
FILL IT, TOO.
WOOD FILLER
WALNUT
GOLDEN OAK
HIGH PERFORMANCE
NATURAL
WHITE
INTERIOR/EXTERIOR
NATURAL FINISH
GORILLATOUGH.COM